BPS FOODSERVICE EQUIPMENT™

BUYER'S GUIDE

BROILERS, TOASTERS, CLEANING, AND SAFETY

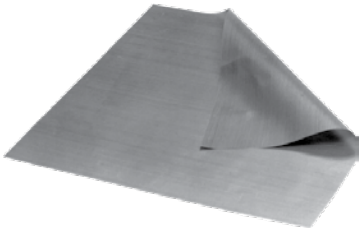

Teflon Sheets

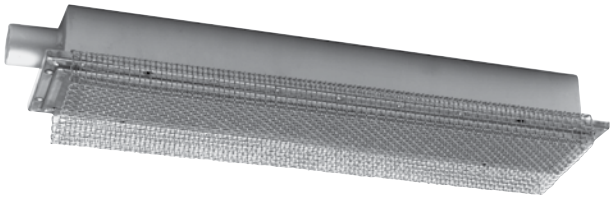

Stainless Steel Burner Box

Thermocouple

Heat Lamp

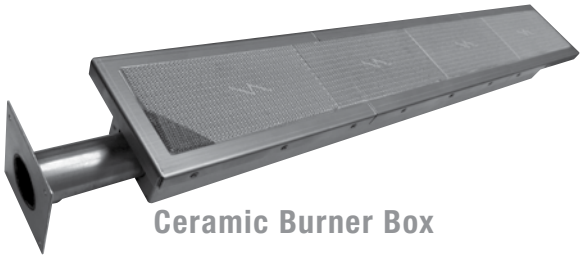

Ceramic Burner Box

Teflon-Coated Bulbs

Teflon Bearing

Insulated Gloves

Call us at 1-800-272-8546 — 24 HOURS A DAY — to place your order!

Fax: 440-460-3999
Email: info@bpsproductsinc.com

VISA MasterCard AMERICAN EXPRESS

Credit cards accepted

CATALOG INDEX

Universal Burner Boxes ..... Page 3

Burner Parts ..... Pages 4

Broiler Parts:

Ignition and Gas System ..... Pages 5-11
Drive Motor and Electrical Components ..... Pages 12-18
Drive Belt System and Platens ..... Pages 19-27
Electric Heating Elements ..... Page 28
Reflectors and Sheet Metal Parts ..... Pages 29-39
Hood Filters ..... Page 40
Teflon Sheets and Rolls for Broilers ..... Page 41-42

Broiler Accessories ..... Pages 43-45

Bun Toaster Parts:

High Speed Roundup Toaster Model VCT-20 ..... Pages 46-50
Black Teflon Sheets and Belt Wraps for High Speed Toasters ..... Pages 51-52
High Speed Prince Castle Toaster Model TX-208BK ..... Pages 53-54
Prince Castle Specialty Vertical Bun Toaster Model 197 ..... Page 55

Fryer Parts and Fryer Accessories ..... Pages 56-64

Safety and Cleaning Supplies ..... Pages 65-72

Miscellaneous ..... Pages 73-74

UPS Delivery Schedule / Free Items for You ..... Page 75

Broiler parts shown on the following pages are manufactured and sold by BPS for BPS, Duke and Nieco broilers.

UNIVERSAL Burner Boxes can be used as an Upper or Lower Burner Box. Spacer Kit included.

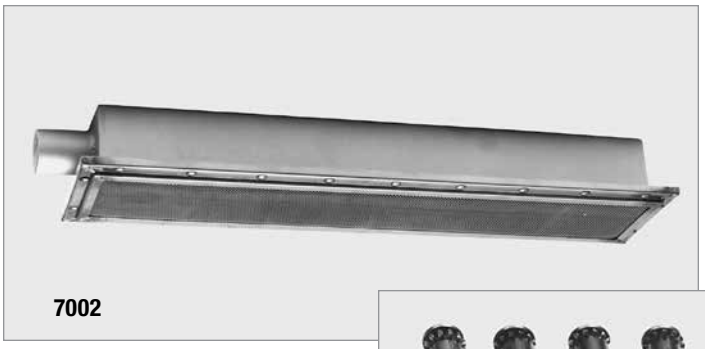

7002

8017 Spacer Kit (set of 4) included with 7002 and 7006.

7002 Universal 24" Burner Box without Reverberator.
OEM #: 8420-1
Caja de quemador superior de 24" desechable sin reverbero.

All boxes NSF-Approved!

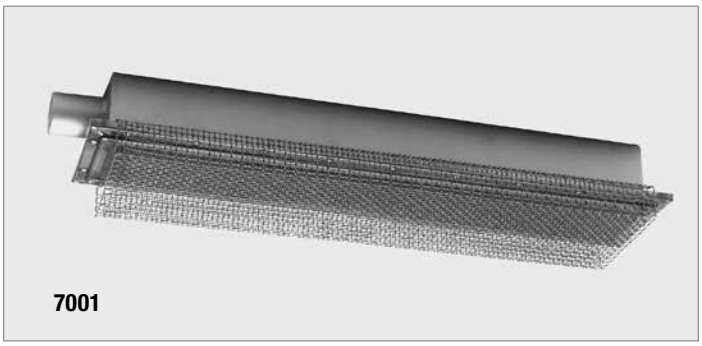

7001

7001 Universal 24" Burner Box with Inconel Reverberator.
OEM #: 8420
Caja de quemador superior de 24" desechable con reverbero de inconel.

7006

7006 Universal 24" Burner Box with Inconel Shield.
OEM #: 8421
Caja de quemador inferior de 24" desechable con protección de inconel.

All boxes contain **5 full layers** of inconel screen. All boxes are factory-assembled and tested. All screens have **cut-proof** safety ends.

BURNER PARTS

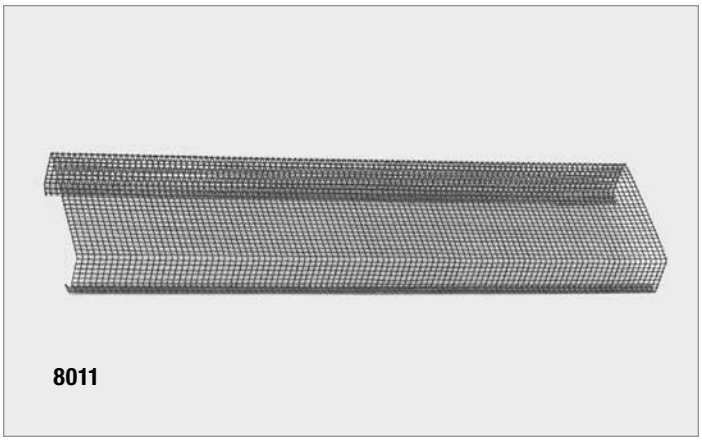

8011

8011 24" Inconel Reverberator with Safety Ends for Upper Burner.

OEM #: 8422

Reverbero de Inconel de 24" con extremos de seguridad para quemador superior.

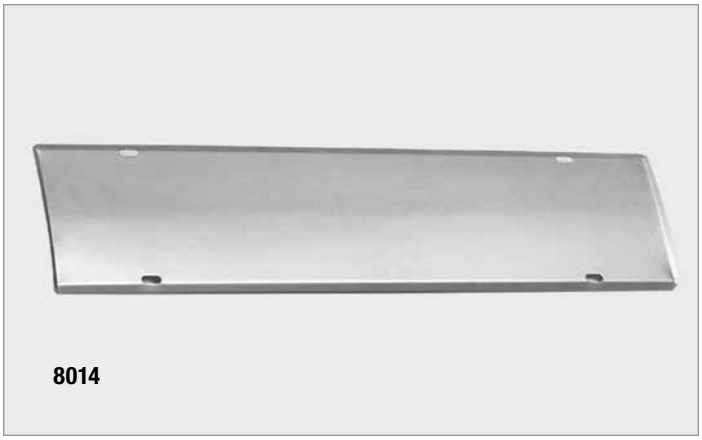

8014

8014 Delux 24" Protective Inconel Shield for Lower Burner.

OEM #: 8014

Protección de inconel de 24" de lujo para quemador inferior.

8017

8017 Spacer Kit (Set of 4) for Lower Burner.

OEM #: 8421-03

Juego de espaciadores (Juego de 4) para quemador inferior.

Let BPS clean your Broiler for you!

Contact BPS and ask for your in-restaurant "Get Your Hands Dirty" Broiler Cleaning Seminar. Your Broiler will get cleaned; and your managers will get educated!

8041
8042

8041 Regulator, **Natural** Gas (5" High Gas) Orange Spring, for 8-Burner Broiler.

OEM #: 2049-A

Regulador, gas natural (Gas alto de 5") resorte naranja.

Springs are available separately.

8042 Regulator, **Natural** Gas (3" Low Gas) Gray Spring, for 8-Burner Broiler.

OEM #: 2025-A

Regulador, gas natural (gas bajo de 3") resorte gris.

Springs are available separately.

8041-1 8042-1
8041-47 8042-47

8041-1 Regulator, **Propane** (11" High Gas) Blue Spring.

Regulador, propano (Gas alto de 11") resorte azul.

Springs are available separately.

8042-1 Regulator, **Propane** (8" Low Gas) Red Spring.

Regulador, propano (gas bajo de 8") resorte rojo.

Springs are available separately.

8041-47 Regulator, **Natural Gas** (5" High Gas) Orange Spring, for 6-Burner and 4-Burner Broilers.

Springs are available separately.

8042-47 Regulator, **Natural Gas** (3" Low Gas) Gray Spring, for 6-Burner and 4-Burner Broilers.

Springs are available separately.

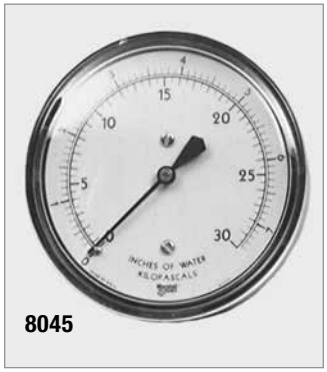

8045

8045 Gauge, Gas Pressure with Lens.

OEM #: 2001

Manómetro, presión de gas con lente.

8044

8044 Lens for Gas Pressure Gauge.

OEM #: 2001-01

Lente para lente de presión de gas.

8046
8047

8046 #50 Burner Orifice, Natural Gas.

OEM #: 2014

Orificio de quemador #50, gas natural.

8047 #57 Burner Orifice, Propane Gas.

OEM #: 2035

Orificio de quemador #57, gas propano.

Contact BPS for a complete BPS Char-Master™ Broiler Catalogue

8048
8049

8048 Pilot Orifice, Natural Gas.
OEM #: 2018
Orificio piloto, gas natural.

8049 Pilot Orifice, Propane Gas.
OEM #: 2023
Orificio piloto, gas propano.

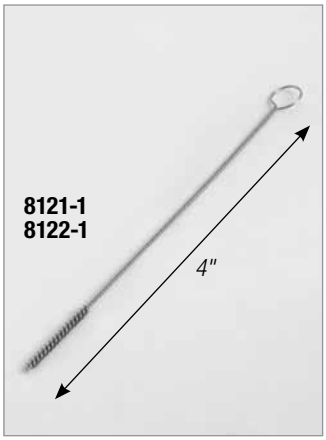

8121-1
8122-1

8121-1 Orifice Cleaner Brush, Natural Gas
Escobellón para limpieza de orificios, gas natural

8122-1 Orifice Cleaner Brush, L.P. Gas
Escobellón para limpieza de orificios, gas LP

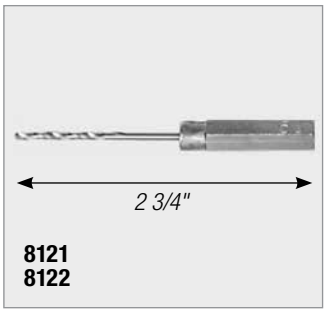

8121
8122

8121 #50 Drill Gauge, Natural Gas.
Calibrador de orificios #50, gas natural.

8122 #57 Drill Gauge, Propane Gas.
Calibrador de orificios #57, gas propano.

8051
8053

8051 24" Thermocouple Lead for All Model Broilers except 1124/1150.
OEM #: 2024
Cable de termopar de 24" para todos los modelos de parrillas excepto 1124/1150.

8053 60" Thermocouple Lead for 1124/1150.
Cable de termopar de 60" para 1124/1150.

8051-72 72" Thermocouple Lead for 815GTMS.

8052
8052-1
8052-2
8052-3

8052 Pilot Burner, 2-Port for 940/950/960/980/824G/824B/1424.
OEM #: 2011
Quemador piloto, 2 puerto para 940/950/960/980/824G/824B/1424.

8052-1 Pilot Carryover Burner, 3-Port Straight, for 950/980/824B/1424.
OEM #: 2178
Quemador de transferencia piloto, 3 puertos, recto, para 950/980/824B/1424.

8052-2 Pilot Carryover Burner, 2-Port, for 950/980/824B/1424.
OEM #: 2179
Quemador de transferencia piloto, 2 puertos, para 950/980/824B/1424.

8052-3 Pilot Carryover Burner, 3-Port Down, for 950/980/824B/1424.
OEM #: 2181
Quemador de transferencia piloto, 3 puertos hacia abajo, para 950/980/824B/1424.

8079

8079 High Gas Solenoid Valve 1/2", NPT.
OEM #: 2003
Válvula solenoide de gas alto 1/2".
National Pipe Thread

8080

8080 Main Gas Solenoid Valve 3/4", NPT.
OEM #: 2085-A
Válvula solenoide de gas principal 3/4".
National Pipe Thread

8081

8081 Push Button Pilot Gas Valve for 940/960/824A.
OEM #: 2026
Válvula de gas piloto de botón pulsador para 940/960/824A.

8083

8083 Push Button for 8081.
Botón pulsador para 8081.

8081-50
8081-80

8081-50 Push Button Pilot Gas Valve for 950/824B/1424.
OEM #: 2122
Válvula de gas piloto de botón pulsador para 950/824B/1424.

8081-80 Push Button Pilot Gas Valve for 980.
OEM #: 2123
Válvula de gas piloto de botón pulsador para 980.

8132

8132 7" Carryover Pilot Tube for 940/960/824A.
Tubo piloto de transferencia de 7" para 940/960/824A.

8132-50 7" Carryover Pilot Tube for 950/980/824B/1424.
Tubo piloto de transferencia de 7" para 950/980/824B/1424.

8081-815

8081-815 Push Button Pilot Gas Valve for 815GTS and 850A.
OEM #: 2058
Válvula de gas piloto de botón pulsador para 815GTS y 850A.

8130

8130 10.5" Upper Pilot Tube for 940/960/824A.
Tubo piloto superior de 10.5" para 940/960/824A.

8133-50 Pilot Tubing Kit (not pictured) for 950/1424/7600 Series Models. Kit includes 7 #8132-50, 1 #8131-50 and 1 #8130-50

8131 19.5" Lower Pilot Tube for 940/960.

Tubo piloto inferior de 19.5" para 940/960.

8131-50 16" Lower Pilot Tube for 950/824B/1424.

Tubo piloto inferior de 16" para 950/824B/1424.

8130-50 11" Upper Pilot Tube for 950/824B/1424.

Tubo piloto superior de 11" para 950/824B/1424.

8071 Spark Ignitor on Control Box (with 2-20" wires) for 940/960/824A.

OEM #: 4181

Encendedor de chispa en caja de control (con 2 cables de 20") para 940/960/824A.

8071-50 Spark Ignitor on Control Box (with one 24" wire) for 950/980/824B/1424.

OEM #: 4181-08

Encendedor de chispa en caja de control (con un cable de 24") para 950/980/824B/1424.

8072 Electrode Spark (1 each per pilot).

OEM #: 4182

Chispa de electrodo (1 por piloto).

8072-1 Electrode Mounting Bracket Set (Electrode not included).

OEM #: 4183

Juego de soporte de montaje de electrodo (no se incluye el electrodo).

BPS PRICE GUARANTEE:

BPS will always meet or beat any competitor's pricing; guaranteeing you the lowest price and **saving you money.**

8056

8056 3/4” Gas Hose x 48”.
OEM #: 9124-A
Manguera de gas de 3/4” x 48”.
3/4" MP x 3/4" MP.

8054

8054 3/4” Quick Disconnect.
OEM #: 9124
Dispositivo de desconexión rápida de 3/4”.

8056-1

8056-1 3-Foot Cable Restraining Device. Connects broiler table to Wall.
OEM #: 9124-B
Dispositivo restrictor con cable de 3 pies. Conecta la mesa de la parrilla a la pared.
Prevents Gas Hose Rupture.

8128
8129

8128 Indicator Light Amber (High Gas).
OEM #: 4222
Luz indicadora ámbar (gas alto).

8129 Indicator Light Red (On/Off Switch).
OEM #: 4100
Luz indicadora roja (interruptor enc/apag).

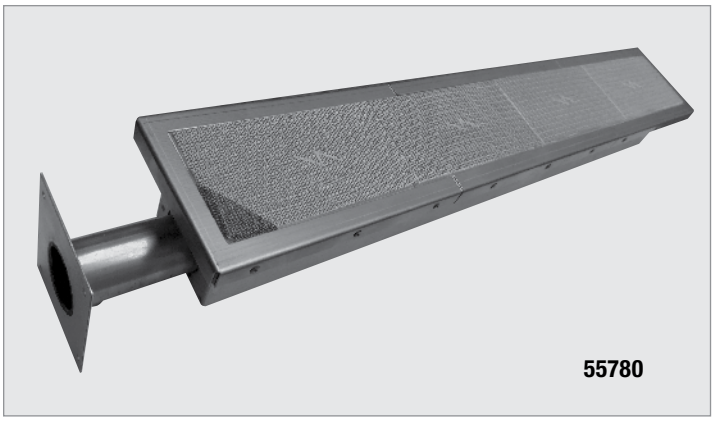

55780 Burner, Infra-Red for Duke Broiler.
OEM #: 175780

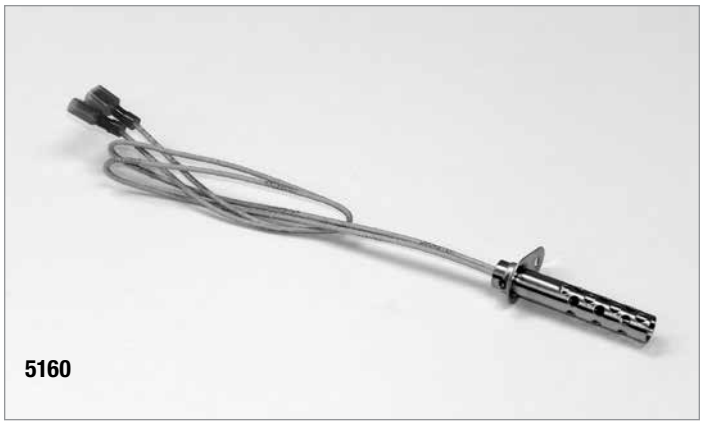

5160 Igniter, Hot Surface, (Glow Plug) 24V for Nieco Models JF 63/64 and MPB 94.
OEM #: 10291

5036 Gas Pressure Gauge for Nieco Model MPB 94.
OEM #: 16036

55200 Burner Shield for Duke Broiler.
OEM #: 175200

5402 Upper Burner with Reflector (28-1/2") for Nieco Models MPB 84/94.
OEM #: 17402

55531 Valve, Nat-Gas Combo 120V (Natural Gas Unit Only) for Duke Broiler.
OEM #: 175531

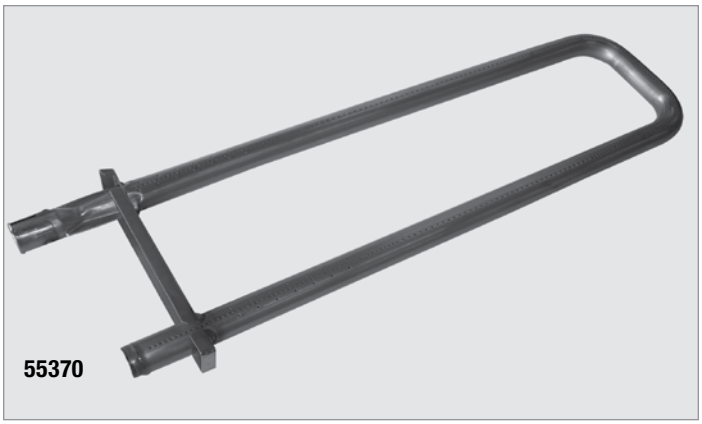

55370 Burner, Lower, BK Upgrade for Duke Broiler.
OEM #: 176370

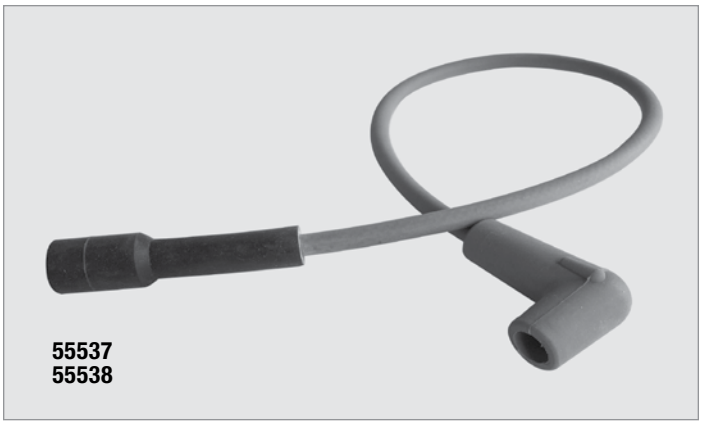

55537 Ignition Suppression Cable — IR (9-1/2") for Duke Broiler.
OEM #: 175537

55538 Ignition Suppression Cable — Low (20") for Duke Broiler.
OEM #: 175538

55536 Igniter for Duke Broiler.
OEM #: 175536

55869 ASY, IGN. Mod. Dual Label for Duke Broiler.
OEM #: 175869

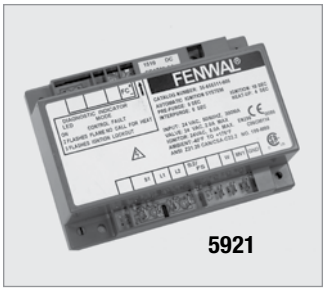

5921 Ignition Module, 24V for Nieco Models JF 63/64 and MPB 94.
OEM #: 16921

55877 ASY, IGN. Mod. 24-5-3 CE/Label.
OEM #: 175877

8108
8108-1

8108 New Gear Motor for 960/824A, 5/8" Shaft.
OEM #: 4137-01
Motorreductor nuevo para 960/824A con enchufe y catarina, flecha de 5/8".

8108-1 Gear Motor for 3/4/5/6/940 with Plug, 1/2" Shaft.
OEM #: 4004-01
Motorreductor para 3/4/5/6/940 con enchufe y catarina, flecha de 1/2".

5786

5786 Gear Motor, DC, Brushless, Reverse Shaft for Nieco Model JF 143.
OEM #: 20786

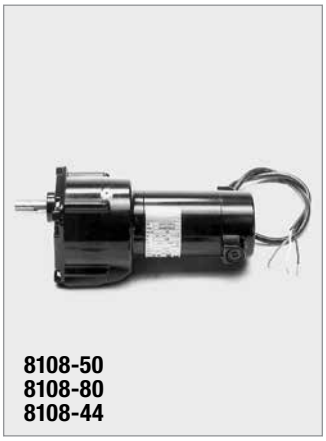

8108-50
8108-80
8108-44

8108-50 Bodine Gear Motor for 950/824B/1424/815, 1/2" Shaft.
OEM #: 4144-03
Motorreductor para 950/824B/1424 con catarina de 10 dientes, flecha de 1/2".

8108-44 Dumore Gear Motor for 950/824B/1424/815, 1/2" Shaft.

8108-80 Gear Motor for 980, 1/2" Shaft.
OEM #: 4144-04
Motorreductor para 980 con catarina de 13 dientes, flecha de 1/2".

8108-50E Gear Motor for Export, 180 DC Volt. (not pictured)
OEM #: 4156
Motorreductor para Exportación, 220 voltios.

5570-C

5570-C Load Sensing Control for Nieco Models MPB 84/94 (replaces 13570-B).
OEM #: 13570-C

5727-B

5727-B Belt Speed Motor Control for Nieco Models JF 62/63/64 and MPB 84/94.
OEM #: 13727-B

8116

8116 Carbon Brush for (pre-1997) 940/960/824A Gear Motor (pair).

OEM #: 4004-02

Escobilla de carbón para motorreductor 940/960/824A (anterior a 1997).

1/4" x 1/4" Square End

8116-51 Carbon Brush for Dumore Gear Motor (pair).

1/4" x 3/8" Square End

8116-50

8116-50 Carbon Brush for 950/980/824B/1424 Bodine Gear Motor (pair).

OEM #: 4145-06

Escobilla de carbón para motorreductor 950/980/824B/1424.

3/16" x 1/4" Rectangular End

8116-60

8116-60 Carbon Brush for (1997 and after) 940/960/824A Gear Motor (pair).

OEM #: 4004-02

Escobilla de carbón para motorreductor 940/960/824A (1997 y posterior).

1/8" x 3/16" Rectangular End

5034

5034 24V 115/230V Control Transformer for Nieco Models JF 62/63/64 and MPB 94.

OEM #: 16034

8116-60-1

8116-60-1 Cap for Brush Holder for (1997 and after) 940/960/824A Gear Motor.

Tapa para portaescobillas para motorreductor 940/960/824A (1997 y posterior).

8116-50-1

8116-50-1 Cap for Brush Holder for 950/980/824B/1424 Gear Motor.

OEM #: 4145-10

Tapa para portaescobillas para motorreductor 950/980/824B/1424.

8116-2

8116-2 Brush Holder for (pre-1997) 940/960/824A Gear Motor.

OEM #: 4004-07

Portaescobillas para motorreductor 940/960/824A (anterior a 1997).

8116-60-2

8116-60-2 Brush Holder for (1997 and after) 940/960/824A Gear Motor.

Portaescobillas para motorreductor 940/960/824A (1997 y posterior).

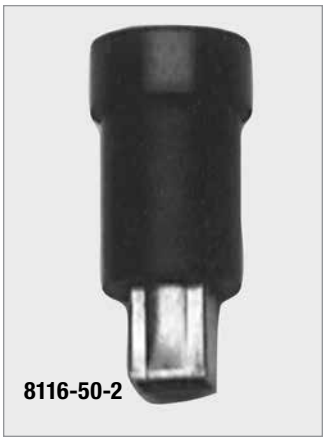

8116-50-2

8116-50-2 Brush Holder for 950/980/824B/1424 Gear Motor.

OEM #: 4145-09

Portaescobillas para motorreductor 950/980/824B/1424.

5167

5167 Main on off Switch 48, 2 Pole, 3 Position for Nieco Model MPB 94.

OEM #: 18167

8066 8066-4 8066-50 8066-1

8066 Sprocket for Motor, 10-Teeth, 5/8" Bore for 960/824A.

OEM #: 6102

Catarina para motor, 10 dientes, barreno de 5/8" para 960/824A.

8066-4 Sprocket for Motor, 13-Teeth, 5/8" Bore for 1424/1450.

OEM #: 6040

8066-50 Sprocket for Motor, 10-Teeth, 1/2" Bore for 950/824B/1424.

OEM #: 6006

Catarina para motor, 10 dientes, barreno de 1/2" para 950/824B/1424.

8066-1 Sprocket for Motor, 13-Teeth, 1/2" Bore for 940/980.

OEM #: 6007

Catarina para motor, 13 dientes, barreno de 1/2" para 940/980.

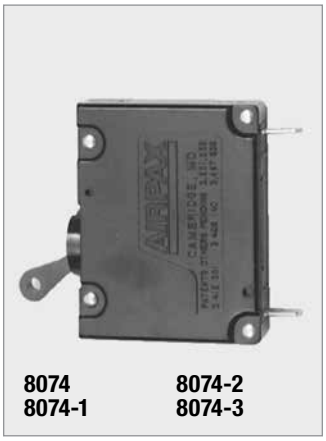

8074 8074-1 8074-2 8074-3

8074 Motor Breaker Switch, Blue Handle, for 960/824A.

OEM #: 4153

Disyuntor para motor, agarradera azul para 960/824A.

8074-2 Motor Breaker Switch, Green Handle, for 940/950/980/824B/1424.

OEM #: 4094

8074-4 Motor Breaker Switch, 50 Amp, for Electric Broilers.

OEM #: 4056 (not pictured)

8074-1 Motor Breaker Switch, White Handle, for 940/950/980/824B/1424.

OEM #: 4094

8074-3 Motor Breaker Switch, Yellow Handle, for 815GTMS.

5480

5480 Main Switch, Rocker, 50amp for Nieco Models JF 62/63/64 and MPB 94.

OEM #: 15480

Let BPS clean your Broiler for you!

Contact BPS and ask for your in-restaurant "Get Your Hands Dirty" Broiler Cleaning Seminar. Your Broiler will get cleaned; and your managers will get educated!

8087

8087 Speed Control, Potentiometer.
OEM #: 4014
Control de velocidad, potenciómetro.

55870

55870 ASY, Solid State Relay/Label for Nieco.
OEM #: 175870

8075-1

8075-1 Broiler Cord with Plug, **Main Power.**
Cable para parrilla con enchufe, alimentación principal.
7 Ft. Long

8075

8075 4-Prong Plug, Main Power (Domestic Only) 30A-220V.
OEM #: 4006
Enchufe de 4 clavijas, alimentación principal (sólo uso doméstico) 30A-220V.

8076

8076 4-Prong Receptacle, Main Power (Domestic Only) 30A-220V.
Receptáculo de 4 clavijas, alimentación principal (sólo uso doméstico) 30A-220V.

8077

8077 Fuse (ABC-5) for 940/960/824A.
OEM #: 4092
Fusible (ABC-5) para 940/960/824A.

8078

8078 Fuse Holder (ABC-5) for 940/960/824A.
OEM #: 4093
Portafusibles (ABC-5) para 940/960/824A.

8077-50

8077-50 Fuse (SC-5) for 950/980/824B/1424.
OEM #: 4602
Fusible (SC-5) para 950/980/824B/1424.

8078-50

8078-50 Fuse Holder (SC-5) for 950/980/824B/1424.
OEM #: 4601
Portafusibles (SC-5) para 950/980/824B/1424.

8073

8073 Main On-Off Switch Toggle.
OEM #: 4099
Interruptor basculante encendido - apagado.

8106

8106 SCR Control.
OEM #: 4135
Control SCR.

8073-1

8073-1 Main On-Off Rotary Switch for Electric Broiler 815GTMS.

8089-1

8089-1 Dial Plate for ATC.
OEM #: 5138-P
Carátula para ATC.

8107

8107 Socket Base for SCR Control.
OEM #: 4136
Base de sócket para Control SCR.

8091

8091 Knob for ATC Potentiometer.
OEM #: 4071-09
Perilla para ATC.

8089

8089 ATC (Automatic Temperature Control) for 940/960/824A
OEM #: 4071-P
ATC (Control automático de temperatura con perilla) para 940/960/824A

8174

8174 Jones ATC Knob Cover.
Cubierta de perilla de ATC Jones.
Tamper-Proofs your ATC Knob

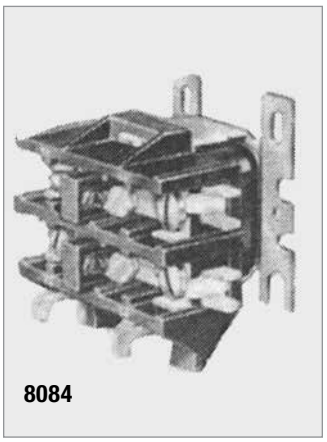
8084

8084 Contactor for 940/960/824A.
OEM #: 4041
Contactor para 940/960/824A.

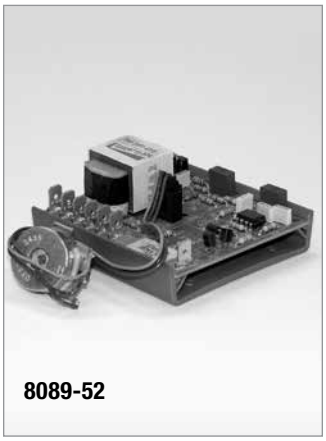
8089-52

8089-52 Temperature Control, Meat Platen for 952/932.
OEM #: 4426

8084-50

8084-50 Relay/Contactor, Platen-Gas and Electric-for 950/980/824B/1424.
OEM #: 4041-1
Relevador/Contactor, Plancha a gas y eléctrica para 950/980/824B/1424.

8089-50

8089-50 ATC for 950/980/824B/1424 Broil and Bun Platen.
OEM #: 4425
ATC para parrilla y plancha para bollos 950/980/824B/1424.

8085

8085 Platen Control, Thermostat for 940/960/824A. (Knob not included).
OEM #: 4020
Control de plancha, termostato para 940/960/824A. (No se incluye perilla).

8090

8090 Probe for ATC.
OEM #: 4073
Sonda para ATC.
Fire retardent. For use on ovens.

8086

8086 Knob for Platen Control Thermostat.
OEM #: 4125/170-012
Perilla para termostato de control de plancha.

55189 Hose, Blower for Duke.
OEM #: 175189

55534 Sensor, Lower Burner (38-1/2") for Duke.
OEM #: 175534

55535 Sensor, IR Burner (41") for Duke.
OEM #: 175535

55873 ASY Control/Label for Duke.
OEM #: 175873

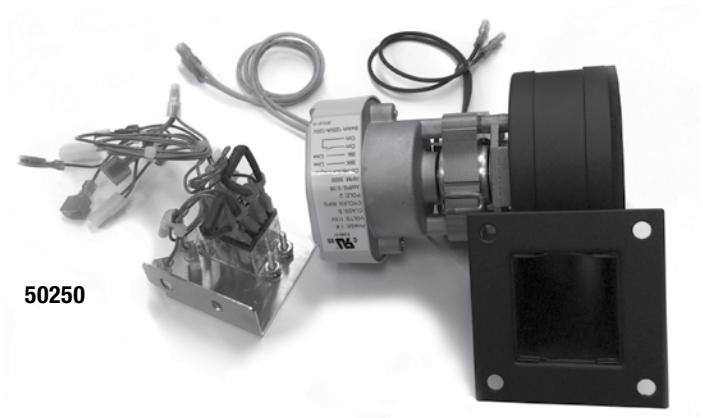

50250 Kit Repl. 120V/60HZ Blower for Duke.
OEM #: 600250

55977 Temp. Probe C-Chamber for Duke.
OEM #: 175977

PREVENT 90% OF YOUR BROILER PROBLEMS.

For $64.95 per year you can prevent 90% of your Broiler problems.
Ask us about your "Tune-Up Kit" part number 8050-3 (Page 45).

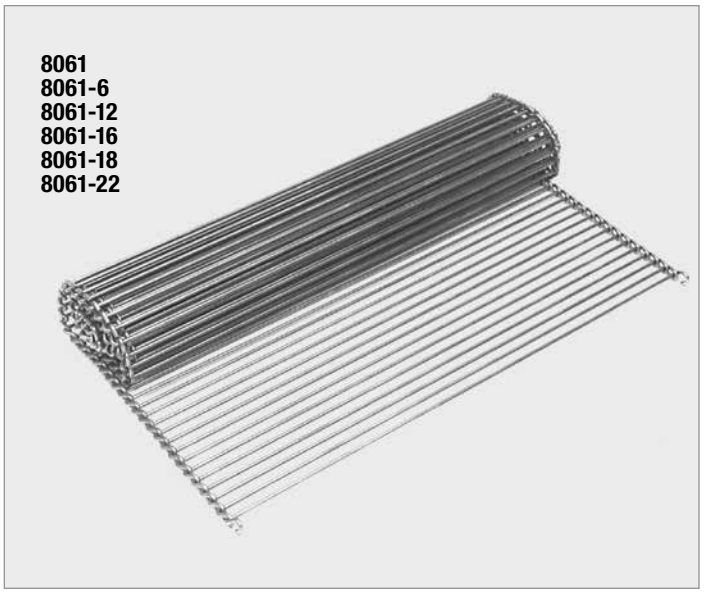

8061
8061-6
8061-12
8061-16
8061-18
8061-22

8061 24” Patty-Bun Rod Belt, 5 Feet for 960/824A, 4 Feet for 940.
OEM #: 6024
Banda para hamburguesas y bollos de 24”, 5 pie para 960/824A, 4 pies para 940.

Width
24”

8061-6 6” Patty-Bun Rod Belt for Split Chain.
Banda para hamburguesas y bollos de 6” para cadena dividida.

Width
6’’

8061-22 22” Patty-Bun Rod Belt ; 6 Feet for 950/824B/1424, 7 Feet for 980.
OEM #: 6023
Banda para hamburguesas y bollos de 22”; 5 pies para 950/824B/1424, 6 pies para 980.

Width
22’’

QUICK TIP: Whenever replacing all or part of your meat chain, generously lubricate the new portion with grease. Use a rag to soak up some grease from your grease catch pan and go over the chain with it. This should prevent patty from sticking.

8061-18 18” Patty-Bun Rod Belt for Split Chain.
Banda para hamburguesas y bollos de 18” para cadena dividida.

Width
18’’

8061-16 16” Patty-Bun Rod Belt for Split Chain.
Banda para hamburguesas y bollos de 16” para cadena dividida.

Width
16’’

8061-14 14” Patty-Bun Rod Belt for Duke Broiler.

Width
14’’

8061-13 13” Patty-Bun Rod Belt for Split Chain.

Width
13’’

8061-12 12” Patty-Bun Rod Belt for Split Chain.
Banda para hamburguesas y bollos de 12” para cadena dividida.

Width
12’’

8061-10 10” Patty-Bun Rod Belt for Split Chain.

Width
10’’

8060

8060 Pliers, Special for Rod Belt.
OEM #: 9133
Pinzas, especiales para banda.

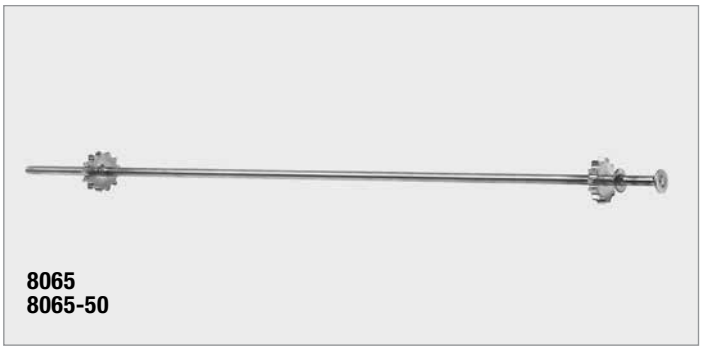

8065
8065-50

8065 Drive Shaft for Patty/Bun Belt for 960/824G.
OEM #: 6054/6090
Flecha motriz para banda de hamburguesas y bollos para 960/824G.

8065-50 Drive Shaft for Patty/Bun Belt for 950/980/824B/1424.
OEM #: 6168
Flecha motriz para banda de hamburguesas y bollos para 950/980/824B/1424.

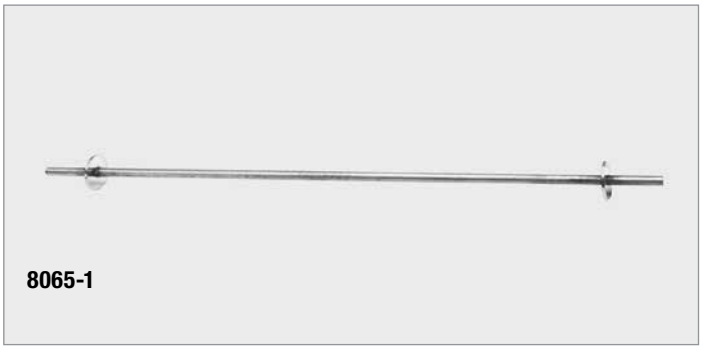

8065-1

8065-1 Bun Idler Shaft for 940/960/824G.
OEM #: 6056
Flecha muerta para bollos para 940/960/824G.

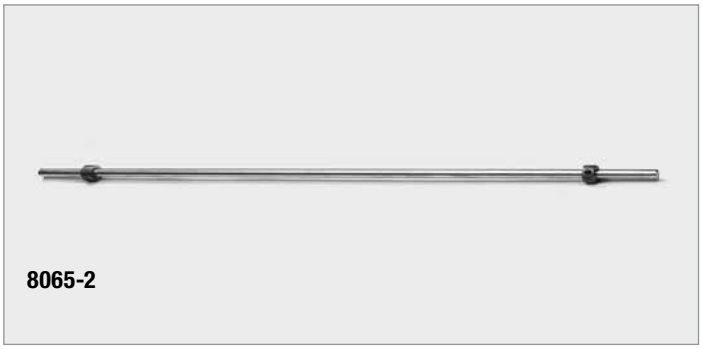

8065-2

8065-2 Patty Idler Shaft for 940/960/824G.
OEM #: 6093
Flecha muerta para hamburguesas para 940/960/824G.

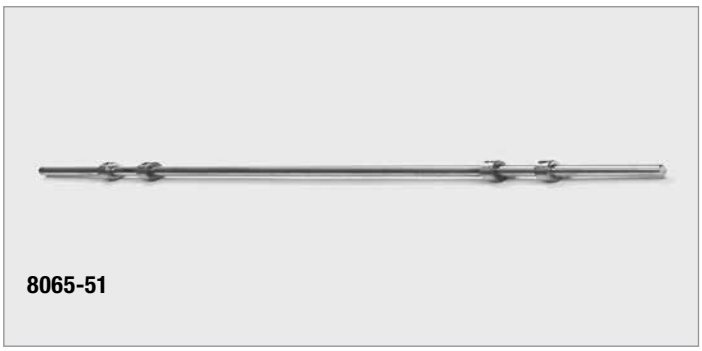

8065-51

8065-51 Patty/Bun Idler Shaft for 950/980/824B/1424.
OEM #: 6167
Flecha muerta para hamburguesas y bollos para 950/980/824B/1424.

6183 10-inch Outer Drive Shaft for 10" x 12" Split-Chain BPS Broiler (not pictured).

6184 12-inch Inner Drive Shaft for 10" x 12" Split-Chain BPS Broiler (not pictured).

8066-5

8066-5 5/8" I.D. 304 Stainless Adjustable Collar.

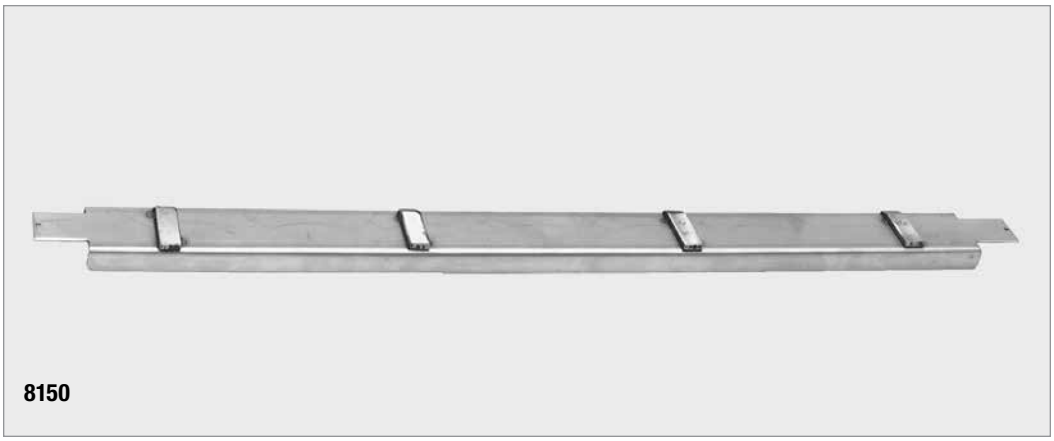

8150

8150 Front Support Cross Bar with Cotter Pins for 940/960.

Barra transversal de soporte delantero con pasadores para 940/960.

L x W x H
25.25” x 2” x .75”

8105
8105-50

8105 Shoulder Bolt with Locknut and Washer for 960/824A.

OEM #: 6055

Perno con resalte con contratuerca y arandela para 960/824A.

8105-50 Shoulder Bolt with Locknut and Washer for 950/980/824B/1424.

OEM #: 4048

Perno con resalte con contratuerca y arandela para 950/980/824B/1424.

8105-51

8105-51 Rod Belt Support for 950/980/824B/1424.

OEM #: 0074-04

Soporte para banda para 950/980/824B/1424.

8030-1

8030-1 Shim to place behind Teflon Bearing.

OEM #: 0024-14

Calza para poner detrás de rodamiento de teflón.

8030
8030-4

8030 5/8” Virgin Teflon Bearing for 960/950/940.

OEM #: 6066

Rodamiento de teflón virgen de 5/8” para 960/950/940.

Fits 5/8" Diameter Shaft.

L x W x H
1’’ x 1’’ x 1.25”

8030-4 5/8” Virgin Teflon Bearing (4-pack).

Rodamiento de teflón virgen de 5/8” (paquete de 4).

Fits 5/8" Diameter Shaft.

L x W x H
1’’ x 1’’ x 1.25”

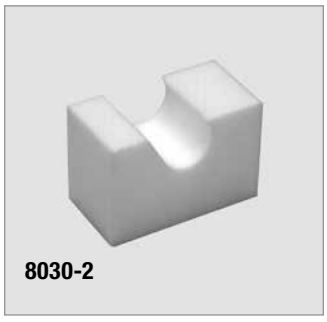

8030-2

8030-2 5/8" Teflon Bearing for Split Chain Broiler.

8037

8037 3/4" Virgin Teflon Bearing.

Rodamiento de teflón virgen de 3/4"

Fits 3/4" Diameter Shaft.

8038

8038 1 1/8" Virgin Teflon Bearing.

Rodamiento de teflón virgen de 1 1/8".

Fits 1 1/4" Diameter Shaft.

L x W x H
1.25" x 1" x 1.875"

8067
8067-2

8067 Sprocket Bun Belt, 15-Teeth, 5/8" Bore 950/960/980/824A/824B/1424.

OEM #: 6037

Catarina para banda para bollos con 15 dientes, barreno de 5/8" para 950/960/980/824A/824B/1424.

8067-2 Sprocket, 15-Teeth, 1/2" Bore.

8068

8068 Sprocket Patty Belt, 30-Teeth, 5/8" Bore 950/960/980/824A/824B/1424.

OEM #: 6038

Catarina para banda para hamburguesas con 30 dientes, barreno de 5/8" para 950/960/980/824A/824B/1424.

8067-1
8066-2

8067-1 Combination Sprocket, 10-15 teeth, 5/8'' Bore for 960/824G.

Catarina de combinación, 10-15 dientes, barreno de 5/8'' para 960/824G.

8066-2 Combination Sprocket, 10-13 teeth, 1/2'' Bore for 950/980/1424.

Catarina de combinación, 10-13 dientes, barreno de 1/2'' para 950/980/1424.

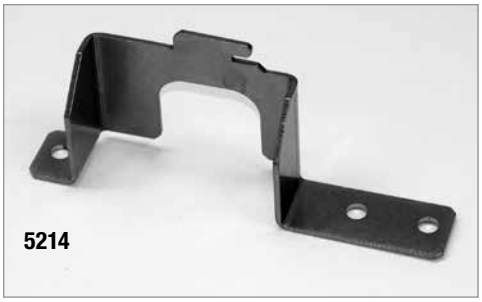

5214

5214 Feeder Mounting Bracket, Left Side for Nieco Model MPB 94.

OEM #: 16214

8063

8063 #35 Drive Chain, per Foot. Includes Master Link (3 Feet required for 960/950/940/824A/824B/1424. 4 Feet required for 980/7810).

OEM #: 6027

Cadena motriz #35, 3 pies (con eslabón maestro) para 960/950/940/824A/824B/1424.

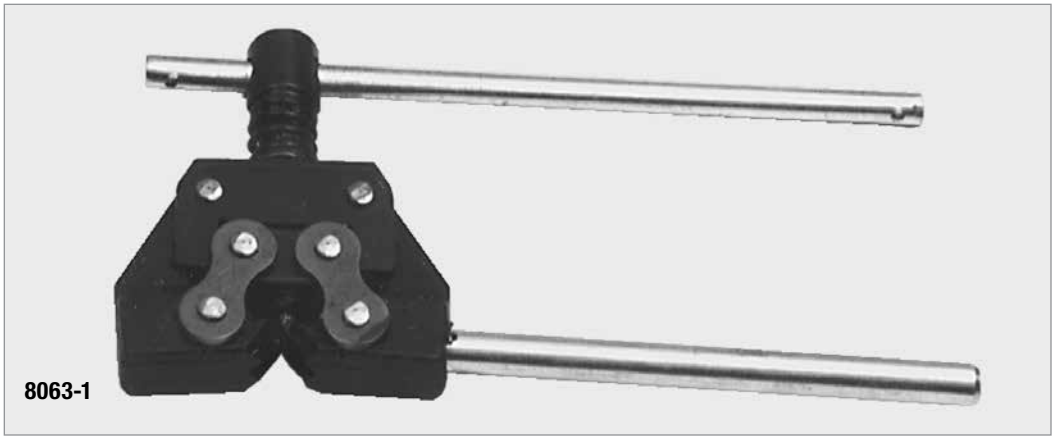

8063-1

8063-1 #35 Chain Breaker Tool.

OEM #: 9134

Herramienta rompedora #35.

8064

8064 Master Repair Link, for #35 Chain.

OEM #: 6048

Eslabón de reparación maestro, para cadena #35.

8064-1

8064-1 Offset Link for #35 Chain.

OEM #: 6053

Eslabón de desplazamiento para cadena #35.

8143-4

8143-4 Patty Belt Shield Only (for use with patty belt extension).

OEM #: 9409-BK

Protección sólo para banda para hamburguesas (para usarse con la extensión de banda para hamburguesas).

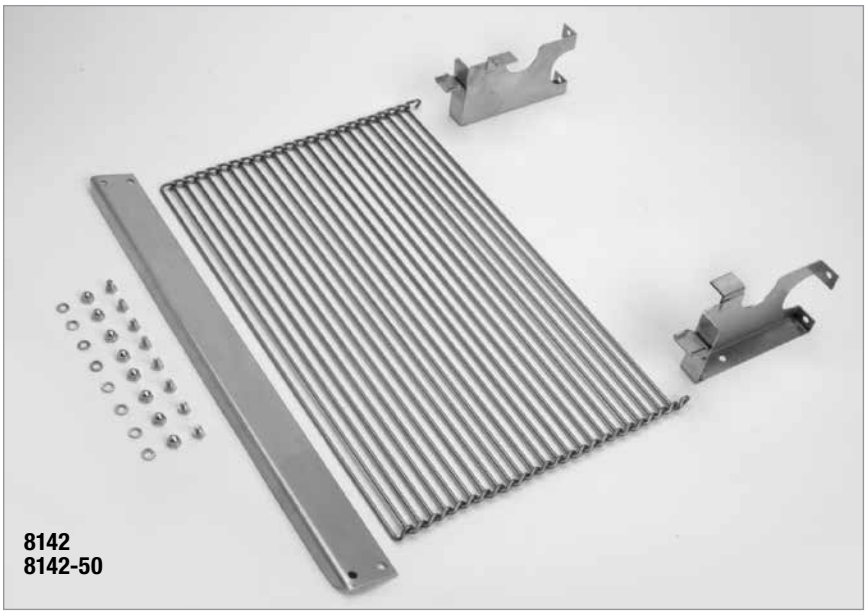

8142
8142-50

8142 Bun Belt Extension Kit Retrofit for 960/824A.

OEM #: 6071

Adaptación de juego de extensión para banda para bollos para 960/824A.

May require 8104 extended crumb pan.

8142-50 Bun Belt Extension Kit Retrofit for 950/1424/824B.

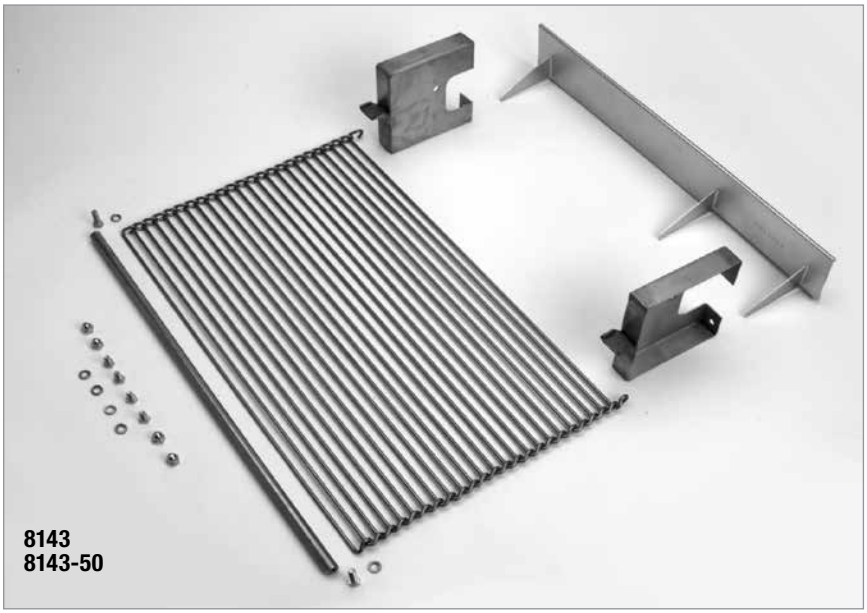

8143
8143-50

8143 Patty Belt Extension Kit Retrofit for 960/824A.

OEM #: 6083-BK

Adaptación de juego de extensión para banda para hamburguesas para 960/824A.

Requires 8088 extended lower heat reflectors.

8143-50 Patty Belt Extension Kit Retrofit for 950/980/824B/1424.

OEM #: 6083-BBK

Adaptación de juego de extensión para banda para hamburguesas para 950/980/824B/1424.

Requires 8088-50 extended lower heat reflectors.

8082-1 Platen Junction Box with cover for 960/824A.
OEM #: 4123-02
Caja de empalme de planchas con cubierta para 960/824A.

8082-50-8 Bun Platen, Left Hand, for 980/7810/885.
OEM #: 4468-LH
Plancha para bollos, izquierda, para 980/7810/885.

8082 Bun Platen for 960/824A.
OEM #: 4123
Plancha para bollos para 960/824A.

8082-40 Bun Platen, for 940/624/650.
OEM #: 4086
Plancha para bollos, para 940/624/650.

8082-50 Bun Platen, Left Hand, for 950/824B/1424.
OEM #: 4434-LH
Plancha para bollos, izquierda, para 950/824B/1424.

8082-51 Bun Platen, Right Hand, for 950/824B/1424.
OEM #: 4434-RH
Plancha para bollos, derecha, para 950/824B/1424.

8082-51-8 Bun Platen, Right Hand, for 980/7810/885.
OEM #: 4468-RH
Plancha para bollos, derecha, para 9807810/885.

8082-54 Wire Set for Bun Platens. Two 10" and 42" Wires with Terminals, for 8082-50 and 8082-51.

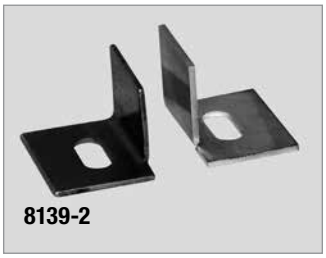

8139-2 Mounting Brackets for Patty Feeder, Pair (Left Hand and Right Hand).
Soportes de montaje para alimentador de hamburguesas, par (izquierdo y derecho).

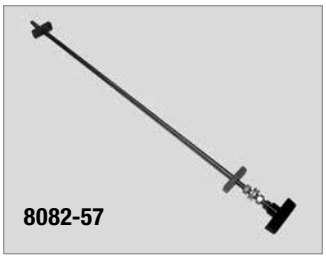

8082-57 Platen Adjustment Rod Assembly Complete for 950.

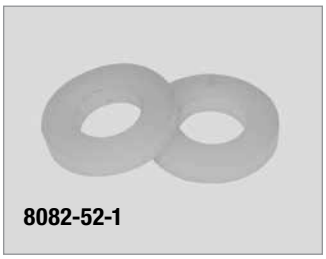

8082-52-1 Nylon Washers (Pack of 2), Platen Adjustment for 950/1424/7600.

8082-10 Platen Support Bracket, Left Hand for 960/824A.
OEM #: 4028
Ménsula de apoyo para plancha, izquierda, para 960/824A

8082-20 Platen Support Bracket, Right Hand for 960/824A.
OEM #: 4074
Ménsula de apoyo para plancha, derecha, para 960/824A.

8173 Teflon Sheet Hold-down Clamp and Screws for 950/980/824B/1424.

OEM #: 4434-05

Abrazadera de sujeción y tornillos para hoja de teflón para 950/980/824B/1424.

8173-50 Universal Teflon Sheet Hold-down Bracket for 1424/950.

8151 Wear Strip - Teflon (21.5" Long) for 960/824A (Set of two with Hardware).

OEM #: 6058

Tira de desgaste - teflón - para 960/824A (juego de dos con tornillería).

8151-4 Wear Strip - Teflon (14" Long) for 940 (Set of two with Hardware).

8151-50 26.5" Long Wear Strip - Teflon - for 950/824B/1424 (Set of two with Hardware).

OEM #: 6060

Tira de desgaste - teflón - para 950/824B/1424 (juego de dos).

8151-1 33" Long Wear Strip - Teflon for 880/885/980 (Set of two with Hardware).

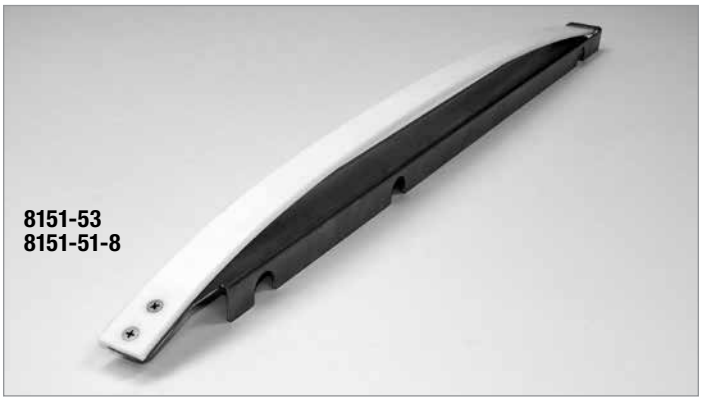

8151-53 Support Channel Assembly (Quantity of one) with Wear Strip and Hardware for 950/824B/1424.

8151-51-8 Support Channel Assembly (Quantity of one) with Wear Strip and Hardware for 980/7810/885.

8151-51 Support Channel Only (Quantity of one) for Teflon Wear Strip for 950.

8171 Knob, Platen Adjustment for 950/824B/1424.

OEM #: 4453

Perilla, ajuste de plancha para 950/824B/1424.

8153 Platen Adjustment Spacer.

OEM #: 4064

Espaciador para ajuste de plancha.

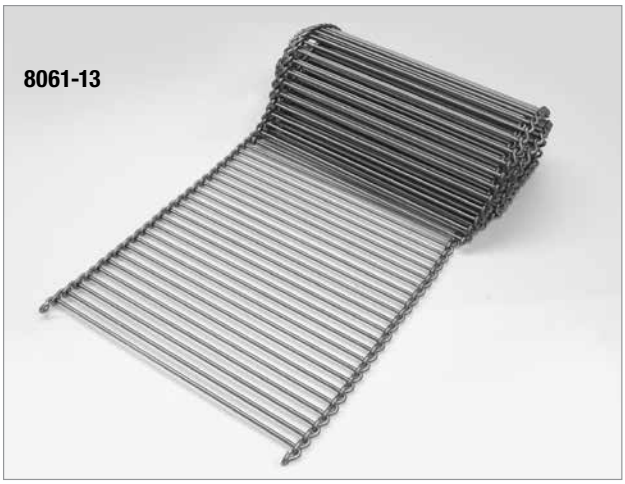

8061-13 13 Inch Patty Rod Belt for Nieco Models JF 63/64/65 and MPB 84/94.
OEM #: 6035

8061-8 8 Inch Patty Rod Belt, 7 GA, 5/8" Pitch Sizes for Nieco.
OEM #: 6121

8061-10 10 Inch Patty Rod Belt, 7 GA, 5/8" Pitch Sizes for Nieco.
OEM #: 6034

8061-12 12 Inch Patty Rod Belt, 7 GA, 5/8" Pitch Sizes for Nieco.
OEM #: 6123

8061-14 14 Inch Patty Rod Belt, 7 GA, 5/8" Pitch Sizes for Nieco.
OEM #: 6036

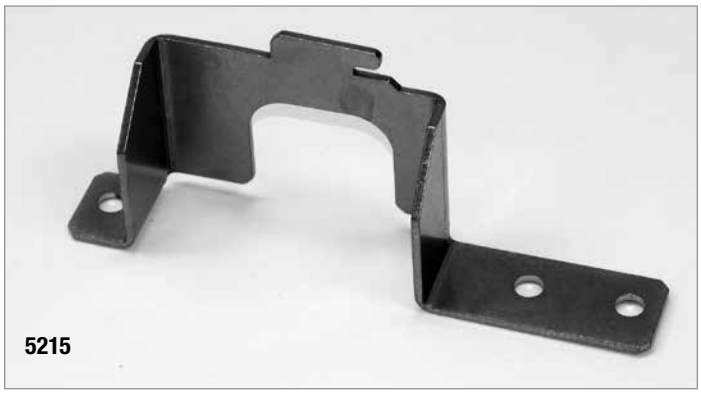

5215 Feeder Mounting Bracket, Right Side, for Nieco Model MPB 94.
OEM #: 16215

5882 Complete Clutch Feeder Drive Assembly for Nieco Models JF 63 and MPB 94.
OEM #: 15882

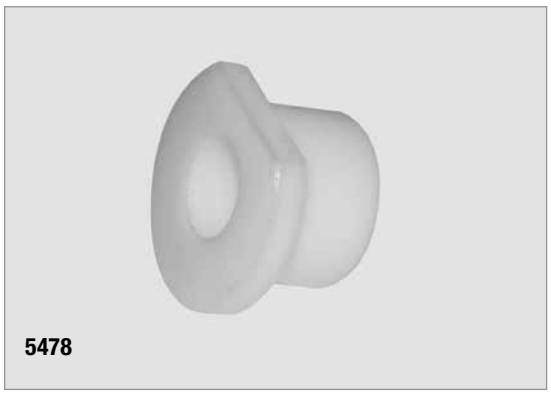

5478 3/8" Shaft Flanged Bearing for Nieco Model MPB 94.
OEM #: 11478

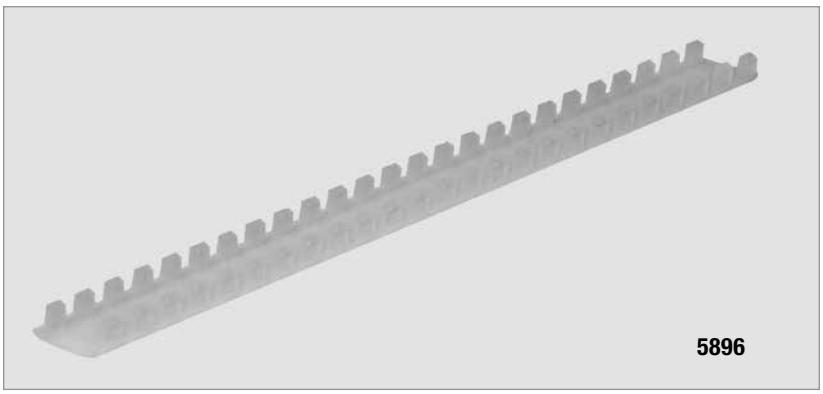

5896 Large Shoulder Washer Bearing for Nieco Model MPB 94.
OEM #: 14896

8165 **8168**
8165-3 **8169**
8166 **8169-1**
8167

8165 24” 208 Volt Hairpin Element.
OEM #: 4022
Elemento de U de 208 voltios y 24”

8165-3 16” 220 Volt Hairpin Element for MPB94.

8166 24” 220 Volt Hairpin Element.
Elemento de U de 220 voltios y 24”

8167 24” 230 Volt Hairpin Element.
OEM #: 4031
Elemento de U de 230 voltios y 24”

8168 24” 240 Volt Hairpin Element.
OEM #: 4081
Elemento de U de 240 voltios y 24”

8169 24” 265 Volt Hairpin Element.
OEM #: 4075

8169-1 24" 250 Volt Hairpin Element.

5055

5055 Lower Heating Element 725W, 220V, Flex 16" Long for Nieco Model MPB 94.
OEM #: 16055

521-02

521-02 Fuse F1 2AMP for Nieco Model JF 143.
OEM #: 4621-02

8165-3

8165-3 Lower Heating Element 950W, 220V, Flex 16" Long for Nieco Model MPB 94.
OEM #: 15691

521-0025

521-0025 Fuse F2 0.25AMP for Nieco Model JF 143.
OEM #: 4621-0025

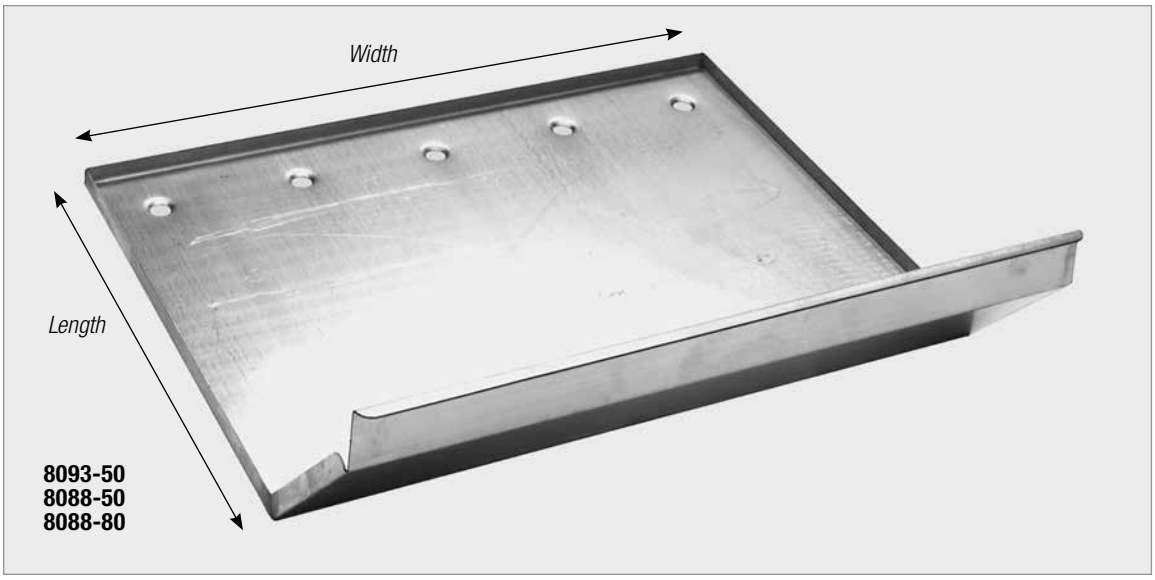

8093-50 Grease Pan for 950/824B/1424.
OEM #: 9091-B
Bandeja para grasa para 950/824B/1424.

L x W
17" x 24"

8088-50 Grease Pan, Extended Length for 950/824B/1424/960/824G (or for Non-extended 980).
OEM #: 9088
OEM #: 9027
Bandeja para grasa para 950/824B/1424 o 980 no extendida.

L x W
23" x 24"

8088-80 Grease Pan for 980/960/824G Extended.
OEM #: 9088
OEM #: 6083-01
Bandeja para grasa para 980

L x W
29" x 24"

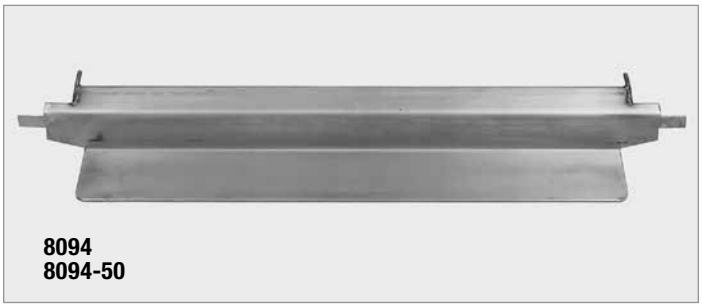

8094 Meat Stripper Blade (Single 24” Belt) for 940/960/824A.
OEM #: 6077
Cuchilla (banda sencilla de 24”) para 940/960/824A.

8094-50 Meat Stripper Blade (Single 22” Belt) for 950/980/824B/1424.
OEM #: 6170
Cuchilla (banda sencilla de 22”) para 950/980/824B/1424.

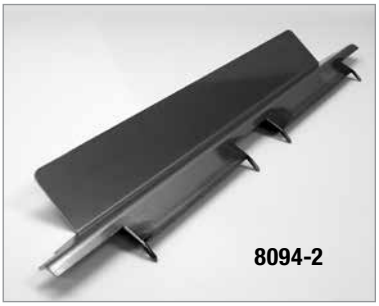

8094-2 Meat Stripper Blade (Split-Chain, 12" x 10") for 7400/7600.

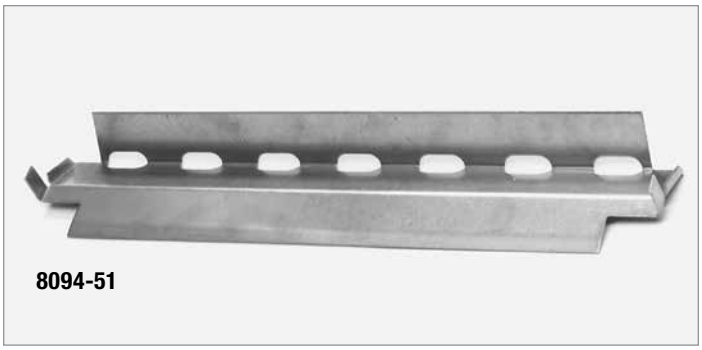

8094-51

8094-51 Belt Scraper, Feed End, for 950/980/824B/1424.
OEM #: 6166
Rasqueta de banda de carne, extremo de alimentación, para 950/980/824B/1424.

8094-56

8094-56 Belt Scraper for 12" x 10" Split-Chain Broiler.

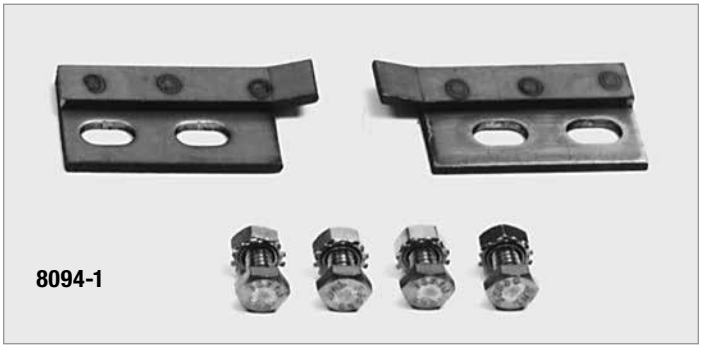

8094-1

8094-1 Mounting Brackets for Stripper Blade, Pair (Left Hand and Right Hand).
Soportes de montaje para cuchilla, par (izquierdo y derecho).

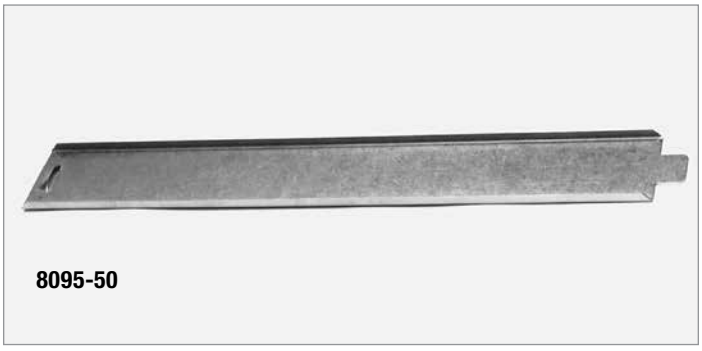

8095-50

8095-50 Burner Support for 950/980/824B/1424.
OEM #: 8425
Apoyo para quemador para 950/980/824B/1424.

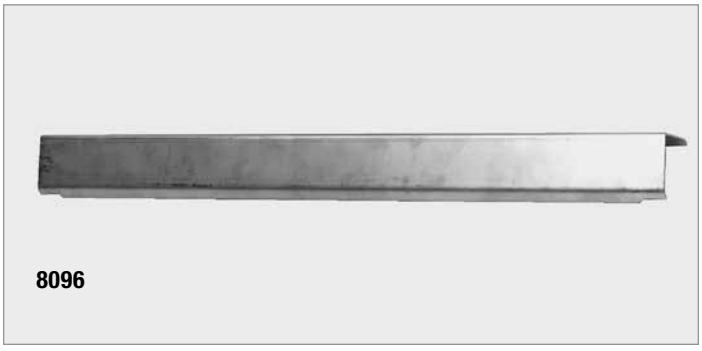

8096

8096 Lower Burner Rear Reflector (Triangle-shaped).
OEM #: 9005
Reflector trasero para quemador inferior (forma de triángulo).

Credit Cards Accepted!

8097-50

8097-50 Channel Strip for 950/980/824B/1424 (2 for 950/824B/1424, 3 for 980).

OEM #: 8455

Tira de canal para 950/980/824B/1424 (2 para 950/824B/1424, 3 para 980).

8098

8098 Upper Burner Front Reflector for 940/950/960/980/824A/824B/1424.

OEM #: 9045/9453

Reflector delantero de quemador superior para 940/950/960/980/824A/824B/1424.

8099
8099-2 (not pictured)

8099 Upper Burner Rear Reflector for 960/824A.

OEM #: 9041

Reflector trasero de quemador superior para 960/824A.

8099-2 Upper Burner Rear Reflector for 940. (Not Pictured.)

OEM #: 9003

Reflector trasero de quemador superior para 940. (No se muestra.)

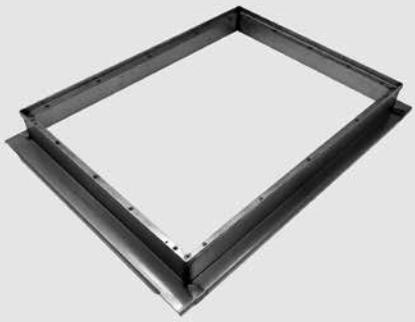

8099-1
8099-5

8099-1 Rectangular Transition Hood 18" x 24" for 4-Burner Broiler.

8099-5 Rectangular Transition Hood 20" x 24" for 6-Burner Broiler.

8099-6

8099-6 Discharge Awning.

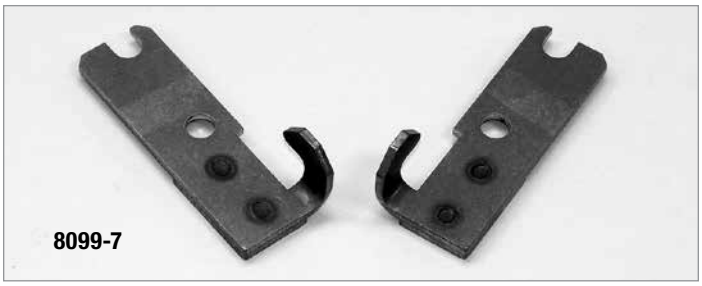

8099-7

8099-7 J-Hooks (pair of 2), Left and Right.

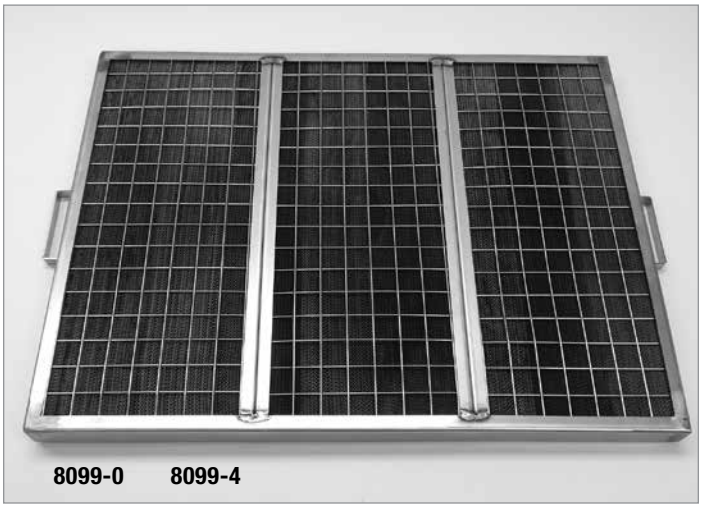

8099-0 8099-4

8099-0 Catalyst 18" x 24" for 4-Burner Broiler.

8099-4 Catalyst 20" x 24" for 6-Burner Broiler.

8099-18 8099-3

8099-18 Rectangular Transition Hood Kit for 4-Burner Broiler (Includes 8099-1, 8099-6, 8099-7 and 8099-8).

8099-3 Rectangular Transition Hood Kit for 6-Burner Broiler (Includes 8099-5, 8099-6, 8099-7 and 8099-8).

8099-8

8099-8 Feed End Awning.

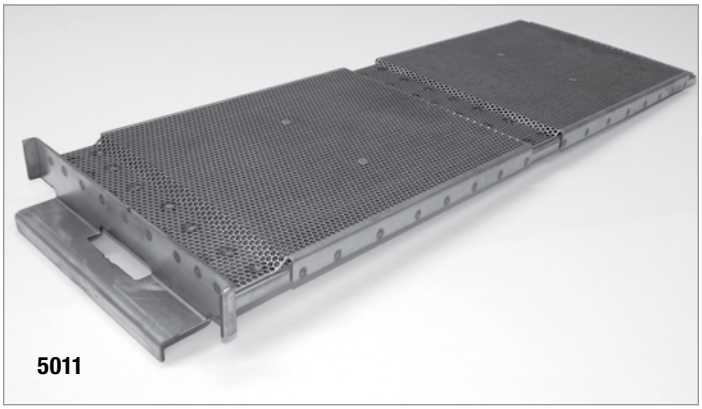
5011

5011 Flame Arrestor, Dual 13 Belt for Nieco Model MPB 94.
OEM #: 16202

5011-1

5011-1 Support, Flame Arrestor, 28.5" for Nieco Model MPB 94.
OEM #: 16227

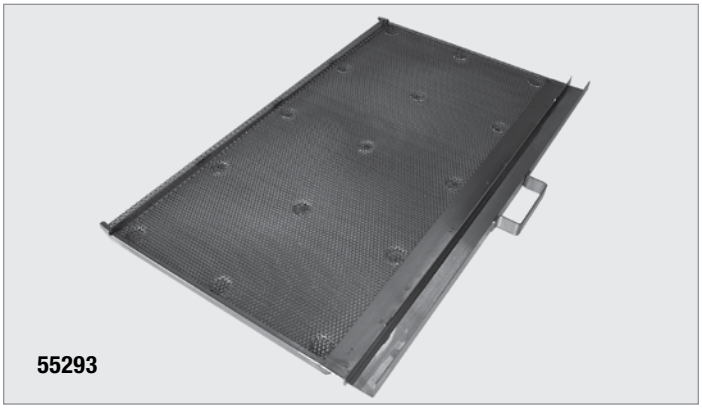
55293

55293 Flame Arrestor for Nieco.
OEM #: 175293

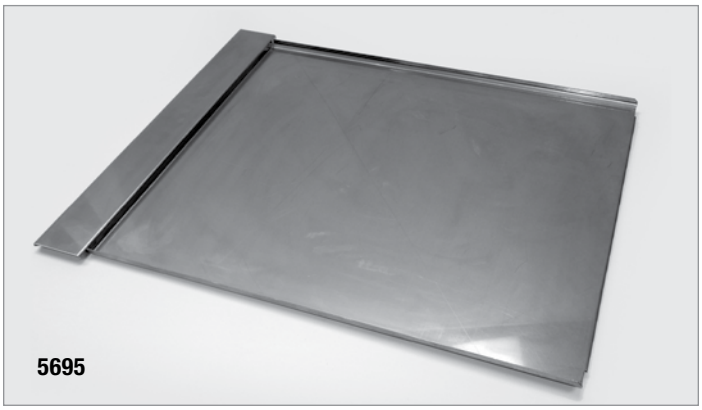
5695

5695 Grease Pan, Flat, 23" Frame for Nieco Model JF 143.
OEM #: 21695

8099-50

8099-50 Awning Reflector, Top Rear, for 950/980/824B/1424.

OEM #: 9184

Reflector de techo, parte superior trasero, para 950/980/824B/1424.

8099-51

8099-51 2-Piece Hinged Awning Reflector, Top Rear, for 950/980/824B/1424.

OEM #: 9684-01

8101

8101 Grease Collection Box for 960/824A.

OEM #: 9220

Caja de recolección de grasa para 960/824A.

8101-50

8101-50 Grease Collection Box for 930/950/824B/1424.

OEM #: 9452

Caja de recolección de grasa para 930/950/824B/1424.

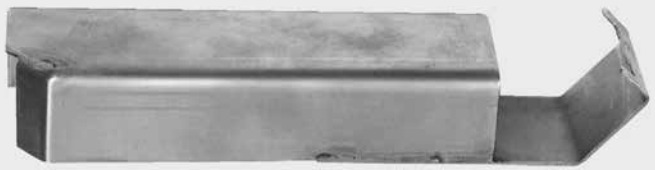

8100
8100-1 (not pictured)

8100 Grease Drain Chute for 940/960/824A.
OEM #: 9062
Canal de drenaje de grasa para 940/960/824A.

8100-1 Grease Drain Chute for 624. (Not Pictured.)
Canal de drenaje de grasa para 624. (No se muestra.)

8100-50
8100-80 (not pictured)

8100-50 Grease Drain Chute for 950/824B/1424.
OEM #: 9164
Canal de drenaje de grasa para 950/824B/1424.

8100-80 Grease Drain Chute for 980. (Not Pictured.)
OEM #: 9162
Canal de drenaje de grasa para 980. (No se muestra.)

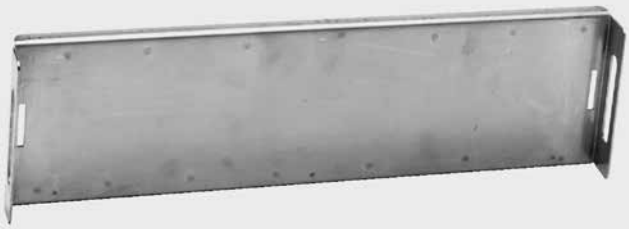

8102-50
8102-80

8102-50 Burner Access Hole Cover for 950/824B/1424.
OEM #: 67
Cubierta de agujero de acceso al quemador para 950/824B/1424.

8102-80 Burner Access Hole Cover for 980/7810.

BPS can fabricate specialty Sheet Metal parts for you!
Contact BPS for your special needs.

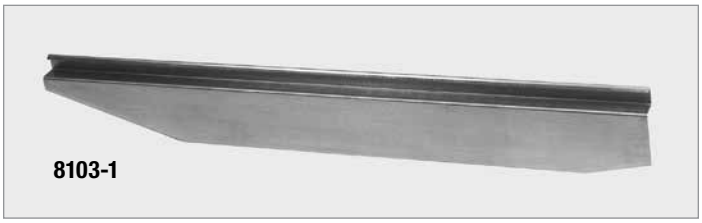

8103-1

8103-1 Hood End Shield, Offset, for 940/960/824A.

OEM #: 9081-1

Protección para el extremo de la campana, desplazada, para 940/960/824A.

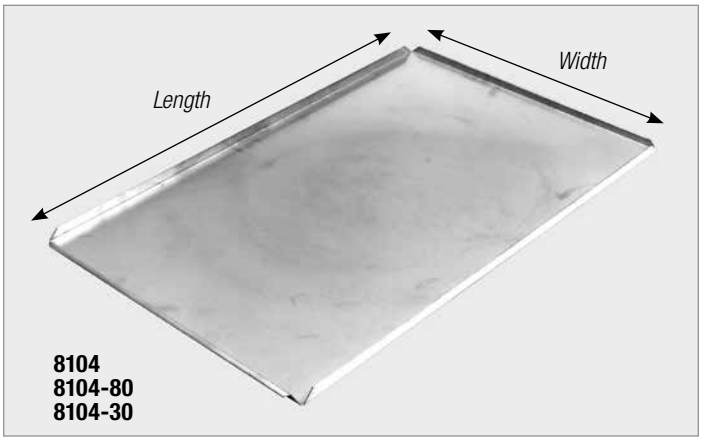

8104
8104-80
8104-30

8104 Crumb Pan for 824/850/950/960/824A/824B/1424.

OEM #: 9059/9077

Bandeja para migas para 824/850/950/960/824A/824B/1424.

L x W
36 5/8" x 24"

8104-80 Crumb Pan for 980.

OEM #: 9087

Bandeja para migas para 980.

L x W
42" x 24"

8104-30 Crumb Pan for 4-Burner Broiler.

L x W
30 5/8" x 24"

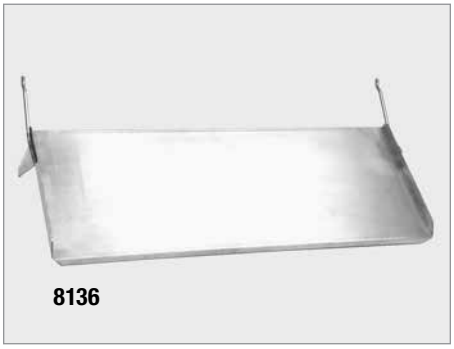

8136

8136 Bun Discharge Chute for 940/950/960/980/824A/824B/1424.

OEM #: 9054

Canal de descarga de bollos para 940/950/960/980/824A/824B/1424.

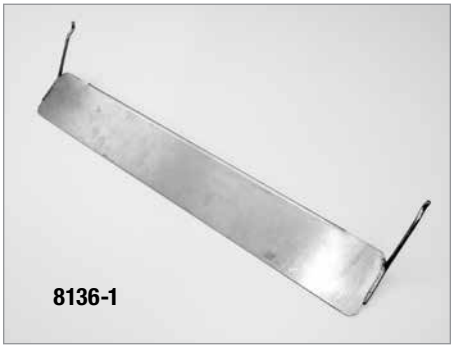

8136-1

8136-1 Bun Discharge Chute (Short Version) for All Model Broilers.

8136-2
8136-2E

8136-2 Flanged Bun Discharge Chute for All Model Broilers.

8136-2E Electrically-Warmed Flanged Bun Discharge Chute for All Model Broilers.

8137

8137 Chain Guard Cover for 800/960/824A.

OEM #: 9058

Cubierta de guarda de cadena para 800/960/824A.

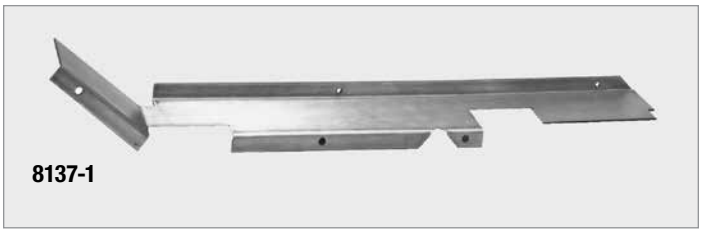
8137-1

8137-1 Chain Guard Support (for Part Number 8137) for 960/824A.

OEM #: 9057

Soporte de guarda de cadena (para número de pieza 8137) para 960/824A.

8137-51

8137-51 Chain Guard Support for 950.

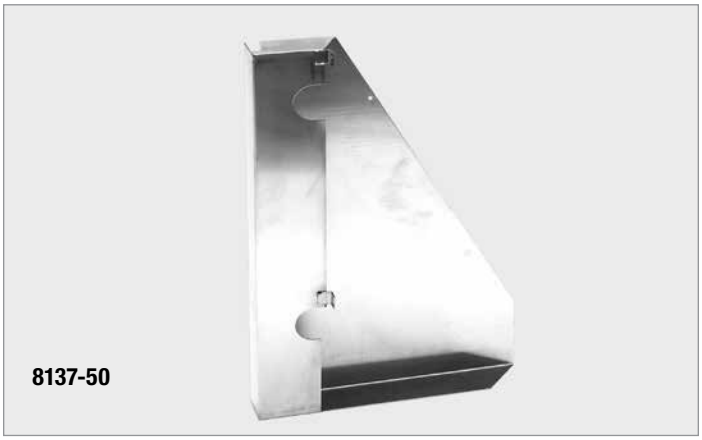
8137-50

8137-50 Chain Guard Cover for 950/824B/1424.

OEM #: 9467

Cubierta de guarda de cadena para 950/824B/1424.

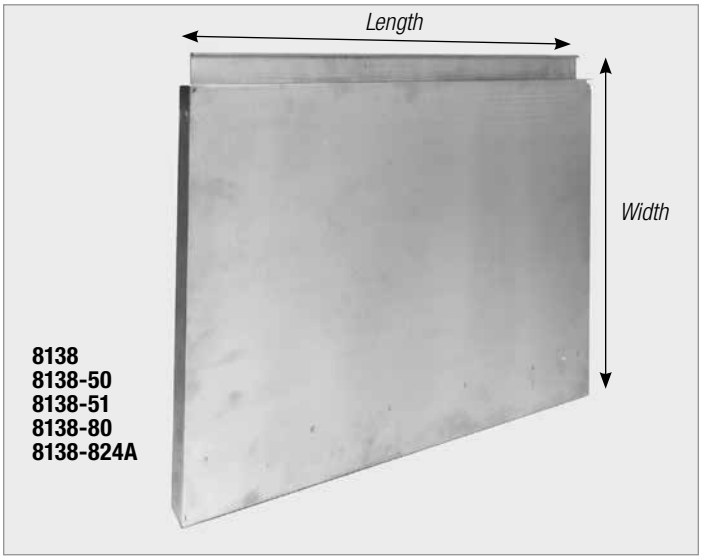

8138
8138-50
8138-51
8138-80
8138-824A

8138 Side Panel for 800/960/824G.

OEM #: 9060

Panel lateral para 800/960/824A.

L x W
31 1/2" x 19 3/4"

8138-50 Side Panel for 950/824B/1424.

OEM #: 9194

Panel lateral para 950/824B/1424.

L x W
31" x 23 3/4"

8138-51 Side Panel for 940/7410.

Panel lateral para 940/7410

L x W
19 3/4" x 24 3/4"

8138-80 Side Panel for 980/885

OEM #: 9204

Panel lateral para 980/885

L x W
37" x 25 3/4"

8138-824A Side Panel for 824A.

Panel lateral para 824A.

L x W
31" x 25"

8140

8140 Patty Discharge Pan for 940/960/824A.

OEM #: 9023

Bandeja de descarga de hamburguesas para 940/960/824A.

L x W x H
26.875'' x 11.875'' x 5.5"

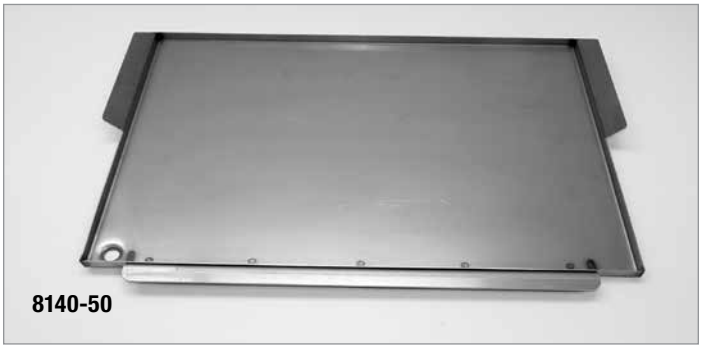

8140-50

8140-50 Patty Discharge Pan for 930/950/824B/1424/7810.

OEM #: 9023-B

Bandeja de descarga de hamburguesas para 930/950/824B/1424/7810.

L x W x H
25.75" x 18.125'' x 1.875''

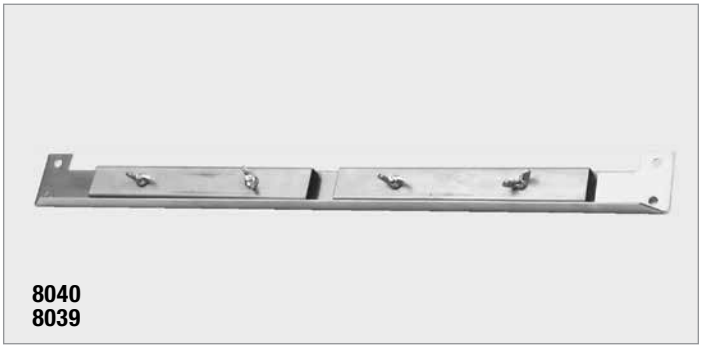

8040
8039

8040 Teflon Support Bracket Assembly.

Ménsula de teflón.

8039 Teflon Support Bracket (Body Only).

Ménsula de teflón (sólo cuerpo).

8040-1

8040-1 Hold Down U-Channel for Teflon Support Bracket.

OEM #: 4123-10

Canal en U de sujeción para ménsula.

8040-2

8040-2 Teflon Support Bracket with Holes for the Platen Adjustment Rods.

8141-50

8141-50 Insert for Patty Discharge Pan for All Models except 940/960/824A.
OEM #: 9131

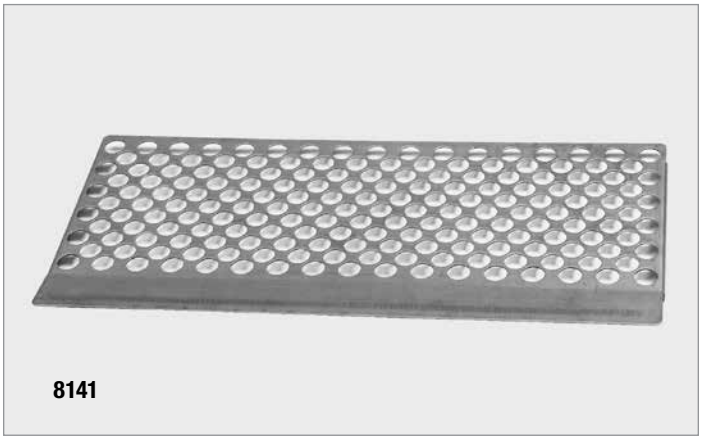

8141

8141 Insert for Patty Discharge Pan for 940/960/824A.
OEM #: 9126
Inserto para bandeja de descarga de hamburguesas para 940/960/824A.

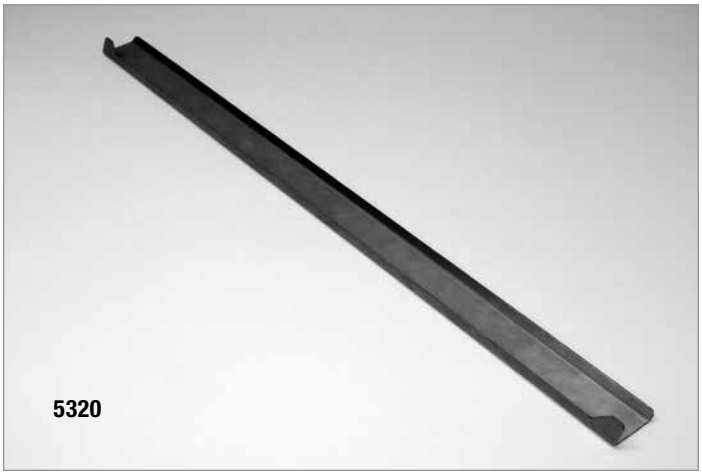

5320

5320 Lower Burner Shield for Nieco Models MPB 84/94.
OEM #: 16320

HOOD FILTERS

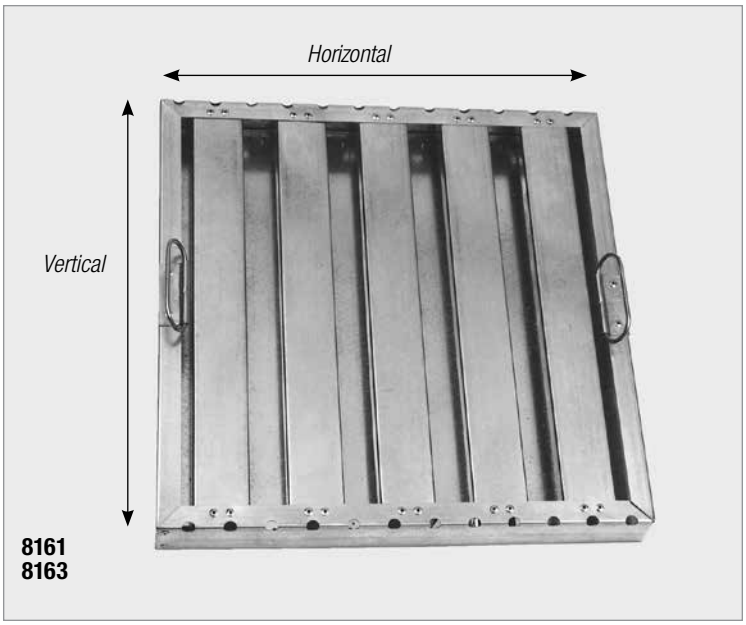

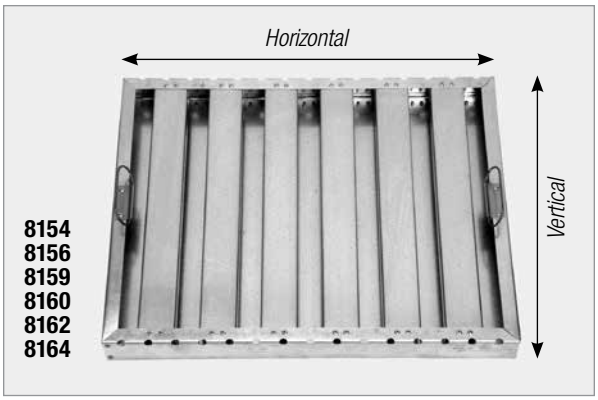

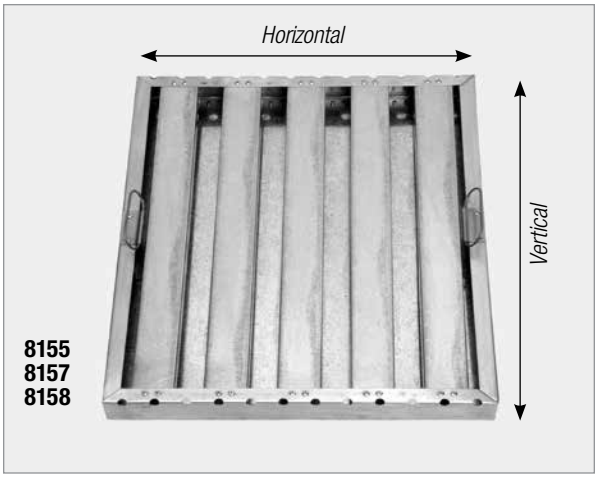

HOOD FILTERS Measure Vertical x Horizontal.
Filtro de campana (medidas vertical x horizontal)

Part No.	Dimensions (V x H)	Depth
8154	11 1/2" x 19 1/2"	1 3/4"
8155	19 1/2" x 15 1/2"	1 3/4"
8156	15 1/2" x 24 1/2"	1 3/4"
8157	24 1/2" x 15 1/2"	1 3/4"
8158	24 1/2" x 19 1/2"	1 3/4"
8159	9 1/2" x 15 1/2"	1 3/4"
8160	9 1/2" x 19 1/2"	1 3/4"
8161	15 1/2" x 15 1/2"	1 3/4"
8162	15 1/2" x 19 1/2"	1 3/4"
8163	19 1/2" x 19 1/2"	1 3/4"
8164	19 1/2" x 24 1/2"	1 3/4"

All filters come with convenient
bale handles. Custom sizes available.
Call for price.

Email at info@bpsproductsinc.com

8031
8032
8031-2
8032-2
8031-80
8032-80 **8031-BLK**
8031-40 **8032-BLK**

8031-80 Brown Teflon Sheet for 980 (11 3/8”x36”).
OEM #: 4468-09
Hoja de teflón café para 980 (11 3/8”x36”).

L x W
36” x 11.375’’

8032-80 Brown Teflon Sheets for 980 (11 3/8”x36”); 6-Pack.
Hojas de teflón café para 980 (11 3/8”x36”).

L x W
36” x 11.375’’

8031-40 Brown Teflon Sheet for 940 (11 3/8”x23”).
OEM #: 4086-09
Hoja de teflón café para 940 (11 3/8”x23”).

L x W
23” x 11.375’’

8031-BLK Black Teflon Sheet for 824A/824B/1424 (11 3/8” x 30”).
Hoja de teflón negro para 824A/824B/1424 (11 3/8” x 30”).

L x W
30” x 11.375’’

8033
8024
8033-2
8028

8028 Brown Teflon **Roll** For 952/962 (23” x 36yds.)
Rollo de teflón café para 952/962 (23” x 36 yardas.)

L x W
36yds x 23’’

8031 Brown Teflon Sheet for 950/960/824A/824B/1424 (11 3/8”x30”).
OEM #: 4434-09/4123-09
Hoja de teflón café para 950/960/824A/824B/1424 (11 3/8”x30”).

L x W
30” x 11.375”

8032 Brown Teflon Sheets for 950/960/824A/824B/1424 (11 3/8”x30”); 6-Pack.
Hojas de teflón café para 950/960/824A/824B/1424 (11 3/8”x30”).

L x W
30” x 11.375”

8031-2 Brown Teflon Sheet for 952/962 Return Flow (23”x26”).
OEM #: 9439/9449-03
Hoja de teflón café para flujo de retorno de 952/962 (23”x26”).

L x W
26” x 23”

8032-2 Brown Teflon Sheets for 952/962 Return Flow (23”x26”); 6-Pack.
Hoja de teflón café para flujo de retorno de 952/962 (23”x26”).

L x W
26” x 23”

8032-BLK Black Teflon Sheets for 824A/824B/1424 (11 3/8” x 30”).
Hojas de teflón negro para 824A/824B/1424 (11 3/8” x 30”).

L x W
30” x 11.375’’

8033 Brown Teflon **Roll** for 950/960/1424 (11 3/8" x 30 ft.).
Teflón café Rollo de 30 pies x 11 3/8” de ancho para 950/960/1424.

L x W
30ft x 11.375’’

8024 Brown Teflon **Roll** for 950/960/824A (11 3/8” x 36 yds.).
Rollo de teflón café para parrilla (11.375” x 36 yardas.).

L x W
36yds x 11.375’’

8033-2 Brown Teflon **Roll** for 952/962 Return (23" x 26 ft.).
Teflón café Rollo de 26 pies x 23” de ancho para retorno de 952/962.

L x W
26ft x 23’’

8033-BLK
8026
8025

8033-BLK Black Teflon **Roll** for 824A/824B/1424
(11 3/8" x 30ft).
Rollo de teflón negro para 824A/824B/1424
(11 3/8"x 30 pies).

L x W
30ft x 11.375''

8026 Black Teflon **Roll** for 824A/824B/1424
(11 3/8" x 36 yds.).
Rollo de teflón negro para parrilla
(11 3/8" x 36 yardas.).

L x W
36yds x 11.375''

8025 Black Teflon **Roll** for 824A/824B/1424
(11 3/8" x 100 yds.).
Rollo de teflón negro para parrilla
(11 3/8" x 100 yardas.).

L x W
100yds x 11.375''

"TRIPLE-LIFE" Teflon?

How can that be? What does it really mean? Contact BPS to understand the mystery of **TRIPLE-LIFE TEFLON!**

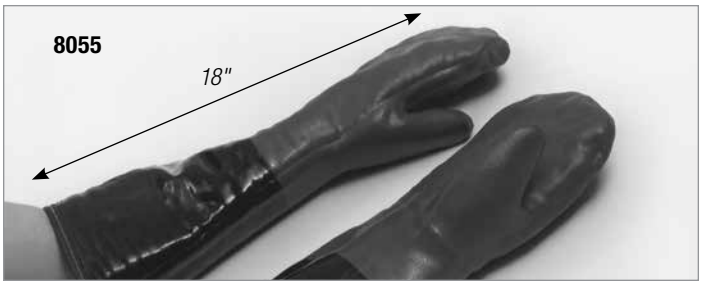

8055 Insulated Broiler Mitts (Pair) 18” Long.
Mitones aislados para parrilla (par) 18” de largo.
Fits up to Elbow

Length
18’’

8057 Brush (Soft Brass) for Cleaning Burner Screen.
Cepillo (latón suave) para limpiar pantalla de quemador.

Length
10.5”

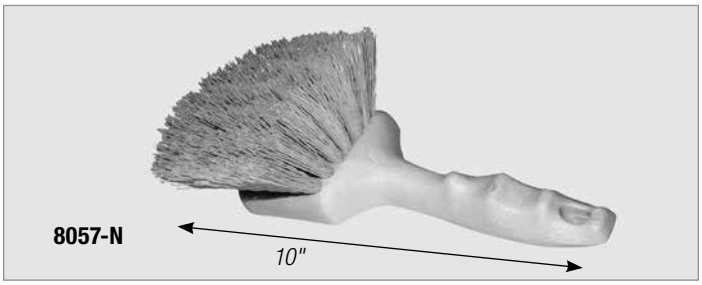

8057-N Brush (Nylon) for Cleaning Burner Screen.

Length
10”

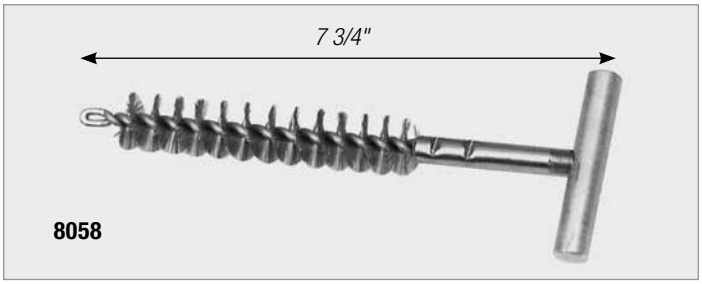

8058 Brush (Hard Brass) for Cleaning Burner Tube.
Cepillo (latón duro) para limpiar tubo de quemador.

Length
7.75’’

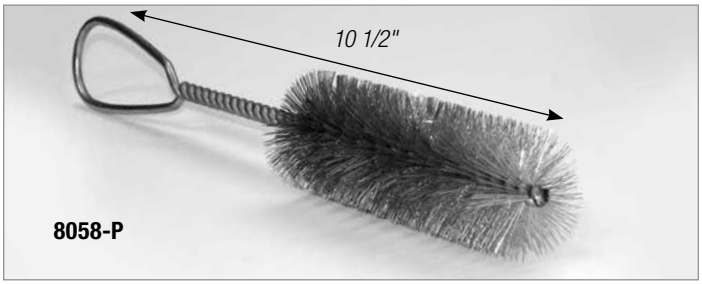

8058-P Brush (Hard Brass), Pear Shaped, 1.5" Diameter, for Cleaning Burner Tube.

Length
10.5’’

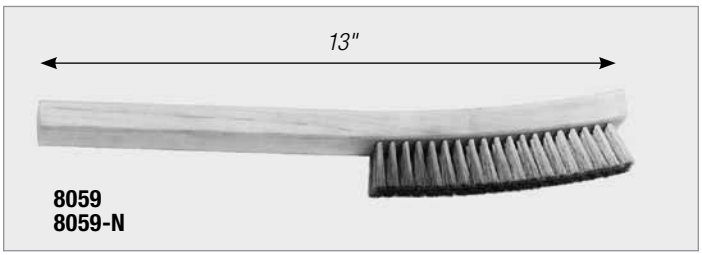

8059 Brush (Stainless Steel) for Cleaning Protective Shield and Rod Belt.
Cepillo (acero inoxidable) para limpiar protección y banda.

Length
13”

8059-N Brush (Nylon) for Cleaning Protective Shield and Rod Belt.

Length
13.5”

BROILER ACCESSORIES

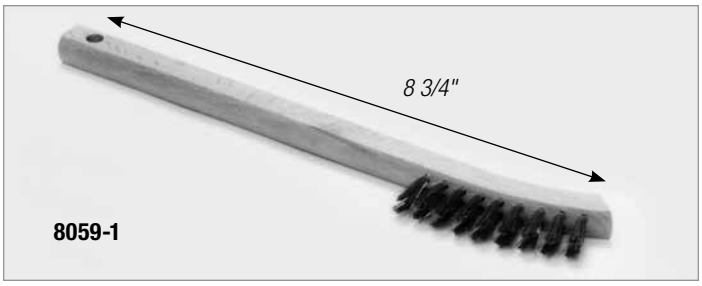

8059-1 Appliance Brush for Tight Spots.

Cepillo accesorio para lugares de alcance difícil.

Length
8.75”

8152 5” Caster with Side Lock Brake.

OEM #: 9588

Ruedecilla de 5” con freno lateral.

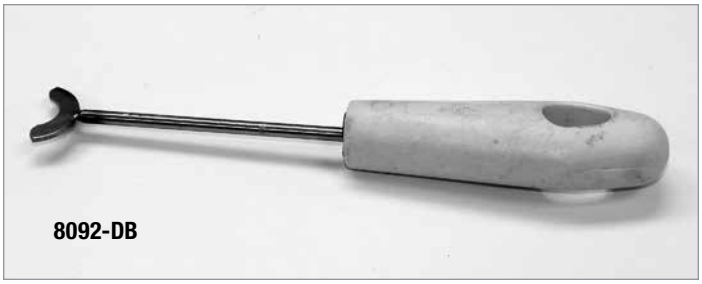

8092-DB Shaft Cleaning Tool with Handle, for Drive Shaft and Meat Belt.

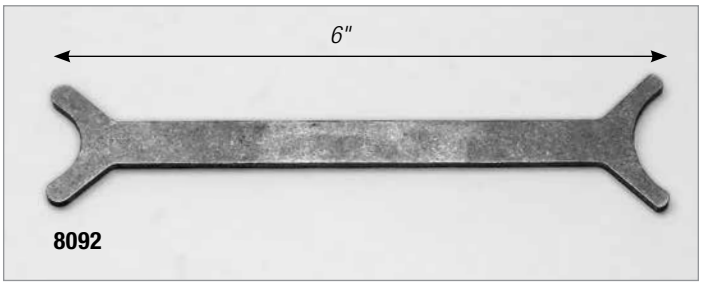

8092 Dog Bone Shaft Cleaning Tool, for Drive Shaft and Meat Belt.

Length
6’’

8143-1 Tie Rod with Hardware (Straightens Broiler Frame).

Barra de acoplamiento con tornillería (endereza bastidor de parrilla).

Fits inside broiler.

L x W
24.5’’ x .625’’

SAVE BIG BY BUYING MAINTENANCE KITS FROM BPS!

SAVE OVER 10% By Buying a Maintenance Helper Kit	**SAVE 10%** By Buying a Broiler Maintenance Kit	**SAVE 25%** By Buying a Brush Kit
8050 $99.95	**8050-8** $69.95	**8050-9** $44.95
Kit consists of the following: **8055** Insulated Broiler Mitts (Pair); **8057** Screen Brush; **8058** Tube Brush; **8059** Stainless Steel Brush; **8092** Shaft Cleaning Tool	Kit consists of the following: **8057-N** Brush (Nylon) for Burner Box; **8058-P** Brass Brush 1.5" large diameter with Pear Shape Handle for Cleaning Burner Tube; **8121-1** Orifice Cleaner Brush; **8059-N** Brush (Nylon) for Shield; Shaft Cleaning Tool with Handle; and **8050-Box** Blue Tool Box	Kit consists of the following: **8057** Brass Brush for Burner Screen; **8058** Brass Brush for Burner Tube; **8092** Shaft Cleaning Tool; **8121-1** Orifice Cleaner Brush; and **8050-Box** Blue Tool Box

Customer parts orders are shipped within One Day of Order!

8050-2 Manager's "Little Helper" (Tool Pouch Included).
"Ayudante" de gerente (Incluye bolsillo para herramienta).
Save 10% off individual pricing by buying this Manager's "Little Helper" (Handy Tool Pouch Included)!

Description	Dimensions
Open End Wrench for Changing Thermocouples	3/8" x 7/16"
Open End Wrench for Tightening Pilot Tubes	1/2" x 7/16"
Orifice Cleaner Brush	n/a
Small Brass Brush for Tight Spots	n/a
Allen Wrench for tightening all 3 Sprockets	n/a
Regular Screwdriver	n/a
Phillips Screwdriver	n/a
Orifice Removal Driver	5/16"
Vinyl Pouch Holder	n/a

55701 Flame Rod Tube Cleaner for Nieco. OEM #: 175701

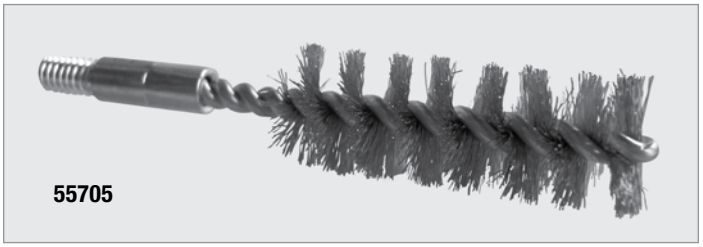

55705 Flame Rod Tube Cleaner Brush for Nieco.
OEM #: 175705

SAVE 25%
By Buying a Broiler Maintenance Kit

8050-10 $59.95

Kit consists of the following:
8057 Brass Brush for Burner Screen;
8058 Brass Brush for Burner Tube;
8059 Stainless Steel Brush for Cleaning Rod Belt; **8092-DB** Shaft Cleaning Tool with Handle; **8021-1** Orifice Cleaning Brush; and **8050-Box** Blue Tool Box

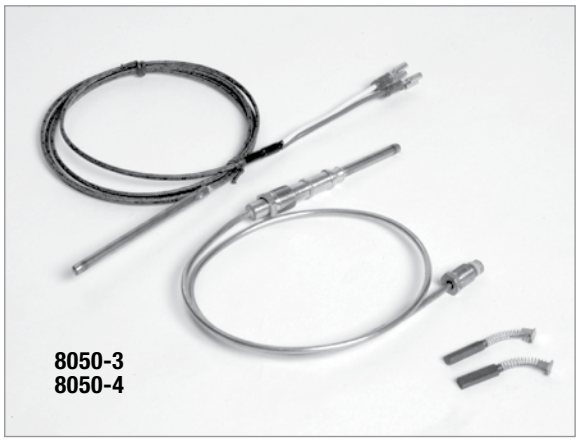

8050-3 Broiler "Tune-Up Kit" for 950/980/824B/1424.
Juego de afinación para parrilla para 950/980/824B/1424.
One Probe (#8090), One Thermocouple (#8051), and One Pair Motor Brushes (#8116-50)

8050-4 Broiler "Tune-Up Kit" for 940/960/824A.
Juego de afinación para parrilla para 940/960/824A.
One Probe (#8090), One Thermocouple (#8051), and One Pair Motor Brushes (#8116-60)

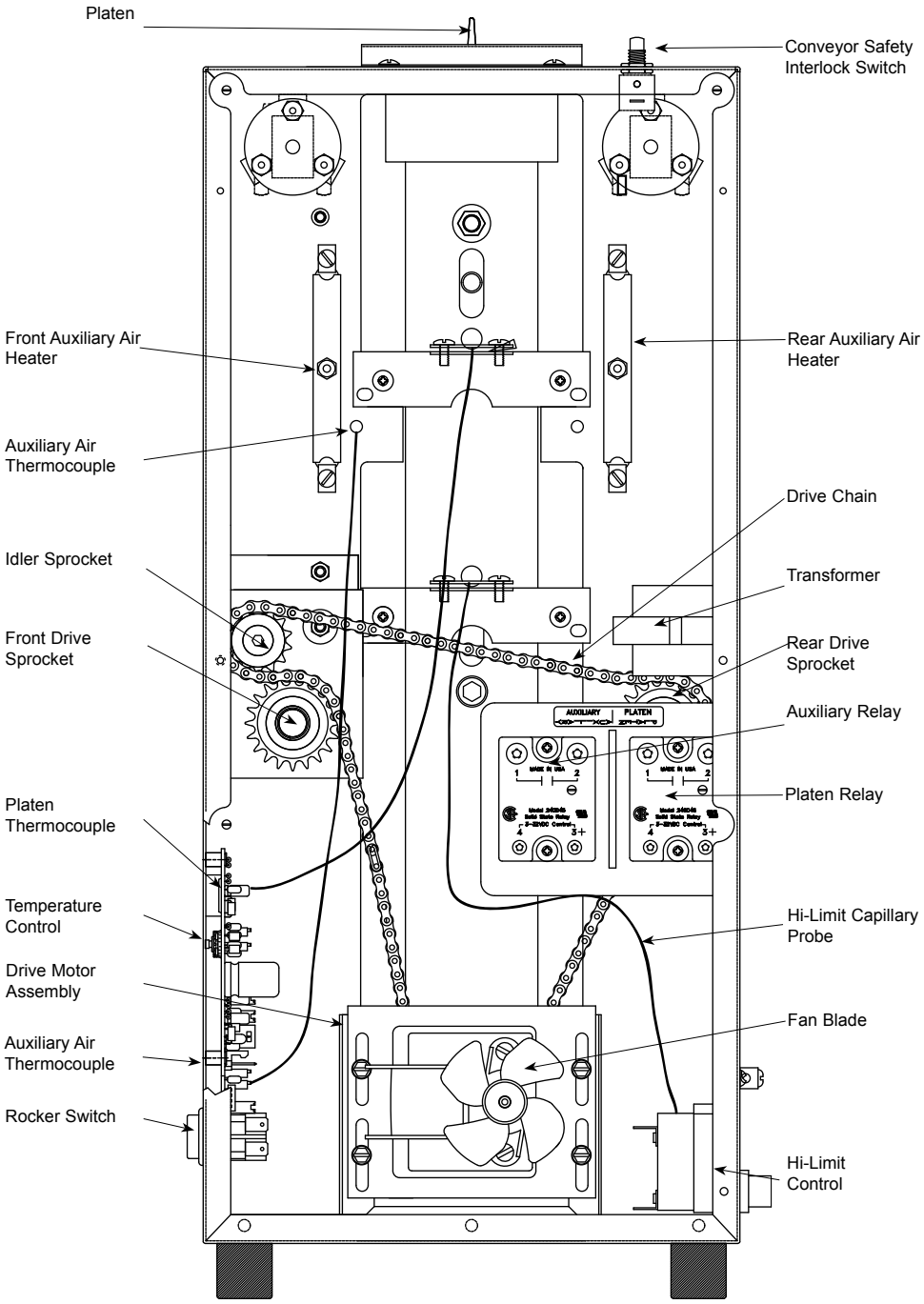
Platen
Conveyor Safety Interlock Switch
Front Auxiliary Air Heater
Rear Auxiliary Air Heater
Auxiliary Air Thermocouple
Drive Chain
Idler Sprocket
Transformer
Front Drive Sprocket
Rear Drive Sprocket
Auxiliary Relay
Platen Relay
Platen Thermocouple
Temperature Control
Hi-Limit Capillary Probe
Drive Motor Assembly
Fan Blade
Auxiliary Air Thermocouple
Rocker Switch
Hi-Limit Control

REPLACEMENT PARTS

Item	Part No.	Description	Qty.
1	0011266	Conveyor Belt (Inc. items below)	2
	0800204	1/2" Pitch Link, Small	2
	0800121	3/4" Pitch Link, Large	38
2	2150117	Idler Shaft	2
3	0011491	Conveyor Cover Assy. (Inc. #29, 52, 61 and 76)	2
4	0010475	Tensioner Assy. (Inc. #40, 76, 85)	4
5	0800332	Rod, Conveyor Cover	4
6	7000207	Sprocket w/setscrew	8
7	7000199	Spacer Kit	1
8	0011444	Control Housing Cover Assy.	1
9	2150118	Drive Shaft	2
10	2100212	Handle, Pull, Snap-in	2
11	7000287	Control Board	1
12	7000296	Ball Bearing (Pack of 2)	1
16	7000167	Bearing & Retainer Kit	6
16A	7000224	Bearing & Retainer Kit Includes 6 of #7000167	1
17	2150181	Drive Sprocket	2
	2150109	Drive Sprocket (Mfg. #9210112 only)	
18	2150187	Drive Chain	1
19	0011299	Idler Sprocket & Bearing	1
20	0011300	Bracket, Idler Sprocket Assy. (Incl. #91, 89, 90, 19, 87)	1
21	0503589	Bracket, Motor Mounting	1
22	7000240	Drive Motor Kit, Dual Frequency 50/60Hz (Incl. #58)	1
23	2150199	Sprocket w/setscrew, 18 Tooth, for 60Hz	1
	2150211	Sprocket w/setscrew, 22 Tooth, for 50Hz	1
24	4010137	Rocker Switch, On/Off (250 VAC)	1
26	405K125	Relay, Solid State	2
27	4010187	Transformer	1
28	7000192	Conveyor Belt Wrap (Pack of 2)	1
	7000416	Conveyor Belt Wrap (Pack of 2)	1
29	7000186	Roller Tensioner Assy. (Pack of 2)	1
30	0503496	Tensioner Bracket, Right	2
31	0503497	Tensioner Bracket, Left	2
32	1010906	Label, Control	1
33	1001069	Label, Dial Compression	1
34	2100253	Knob, Control	2
35	0011445	End Housing Cover Assy.	1
36	4050214	Thermocouple Assy.	1
37	0021170	Weldment, End Housing	1
38	7000249	Release Sheet (Pack of 3)	-
	7000250	Release Sheet (Pack of 10)	-
39	0021169	Control Housing	1
40	7000121	Slide Rail Kit (Includes 2 slide rails for tensioners)	2
41	0021207	Conveyor Cam	2
42	7000176	Thermocouple Retainer Kit	2
43	4030332	High Limit Control	1
45	0503455	Tension Spring, Inner	4
46	0503590	Bracket, Motor	1
47	0700580	Wire Set (not shown)	1
48	0503385	Bun Chute (9210100 and 9210110	1
48A	0503677	Bun Chute (9210112)	1
49	4030348	Auxiliary Heater, 675W/230V	2
	4030349	Auxiliary Heater, 675W/208V	2
50	7000165	Auxiliary Thermocouple Kit	1
51	7000288	Platen (208V)	1
	7000289	Platen (230V)	
52	2100252	Teflon Tape	4

Item	Part No.	Description	Qty.
53	0503359	Bracket, Relay	1
54	0503150	Heater Clip	2
55	303P127*	Hinge Pin, Belt Wrap	2
56	4060355	Terminal Block	1
57	0503533	Bracket, Auxiliary Thermocouple	1
58	4000170	Fan Blade, Motor	1
60	040K251	Strain Relief (Domestic) Incl. #63	1
	0400315	Strain Relief (International)	1
61	05P2199*	Spacer	4
62	0500464	Retainer Bearing	1
63	040P138*	Locknut, 1/2"	1
64	0011528	Heat Shield Assy.	1
65	325P163*	Setscrew, 1/4-28 x 5/16"	8
66	100P864*	Label, Caution Hot	1
67	308P183*	Screw, Hex, #8-32 x 3/8"	2
68	304P105*	Nut, #4-40, "KEPS"	4
69	406P107*	Cable Tie	1
70	308P143*	Nut, #8-32, "KEPS"	6
71	310P103*	Screw, Hex, #10-32 x 1/4"	4
72	310P157*	Washer, #10	6
73	308P101*	Nut, #8-32	3
74	306P101*	Nut, Hex, #6-32	2
75	306P123*	Screw, #6-32 x 7/8"	2
76	308P145*	Nut, Hex Acorn, #8-32	14
77	100P900*	Label, Service	1
78	325P104*	Washer, 1/4"	4
79	325P109*	Screw, 1/4-20 x 1/2"	4
80	308P124*	Screw, 1-Way, #8-32 x 1/2"	1
81	10P1022*	Label, Heaters	1
82	310P180*	Screw, #10-32 x 1-3/4"	4
83	308P133*	Screw, #8-32 x 1/4"	1
84	308P157*	Screw, Tap, #8-32 x 3/8"	20
85	308P181*	Screw, Flat Hd., #8-32 x 3/8"	4
86	218P145*	Cover, Leg, Bumper	4
87	331P103*	Shoulder Bolt, 5/16-18 x 1"	1
88	306P105*	Screw, #6-32 x 1/2"	8
89	331P106*	Lockwasher, 5/16"	1
90	212P118*	Flat Washer, 5/16"	1
91	331P101*	Nut, Hex, 5/16" x 18"	1
92	300P102*	Nut, Tinnerman	2
93	210K230	Bumper, Recess Leg, 1" (qty. of 4)	1
94	0503495	Retainer, Tensioner Bracket, RH	1
95	0503507	Retainer, Tensioner Bracket, LH	1
96	2100259	Slide Bar	4
97	4010107	Interlock Switch	1
99	306P104*	Screw, #6-32 x 1/4"	6
100	4000138	Fan	1
101	0503115	Duct, Fan	1
102	1001056	Label, Crown & Heel	1
103	2120147	Leg Spacers	4
104	4060374	Ground Lug	1
106	4030326	Base Heater	1
107	0503557	Base, Outer	1
108	0503558	Base, Inner	1
109	1001023	Label, Caution Hot	1
110	7000292	Bun Feeder Kit	1
111	0011675	Extended Rear Cover (Mfg. # 9210304 & 9210308 only)	1
112	0400243	Right Angle Strain Relief (Mfg. # 9210308)	1
113	2180128	7/8" Hole Plug	1

**** Sold only as packages of 10***
Not Shown: Part Number 2140152 Lubit-8® Lubricant.

BUN TOASTER PARTS: HIGH SPEED ROUNDUP TOASTER MODEL VCT-20

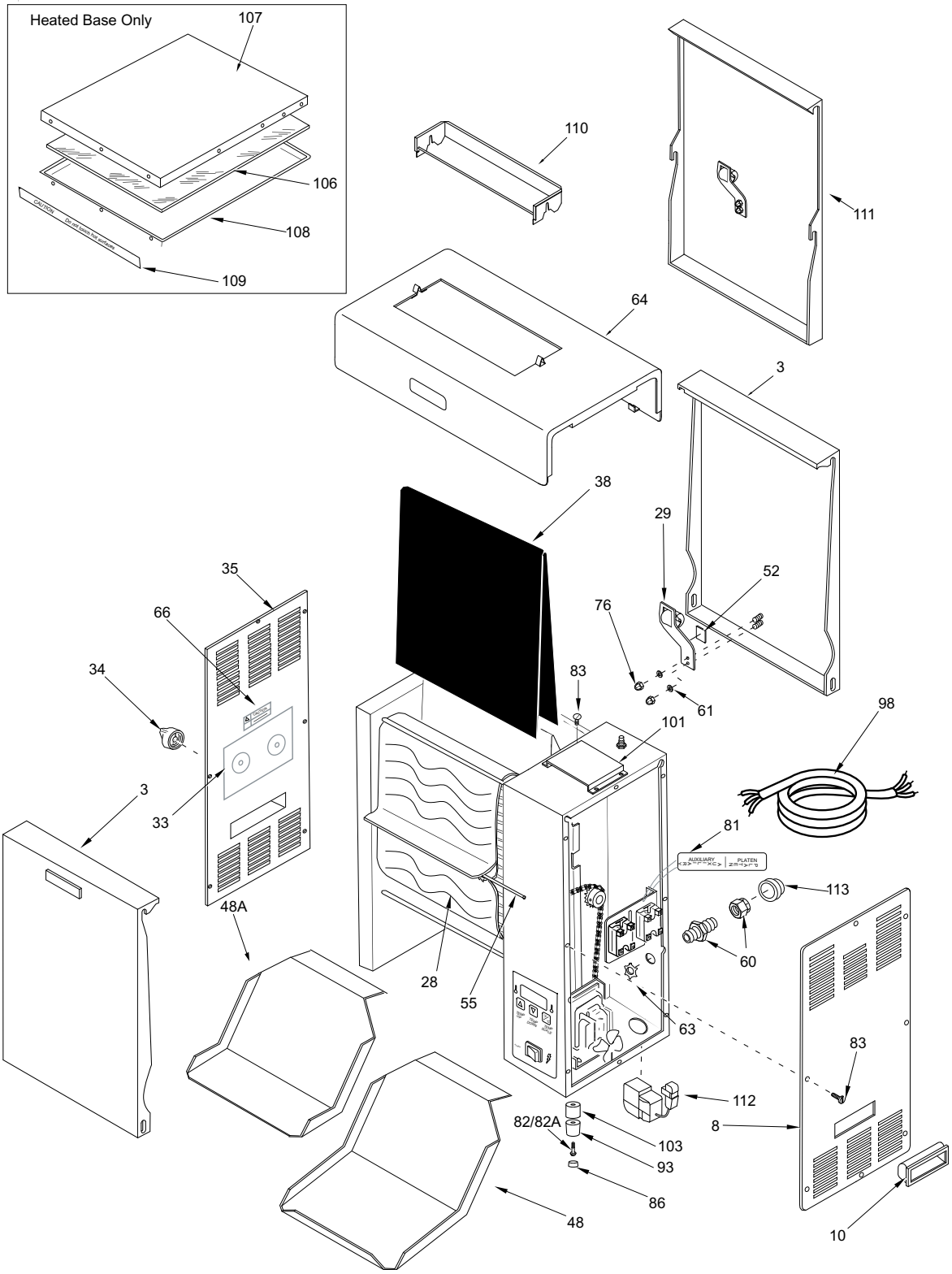

Credit Cards Accepted!

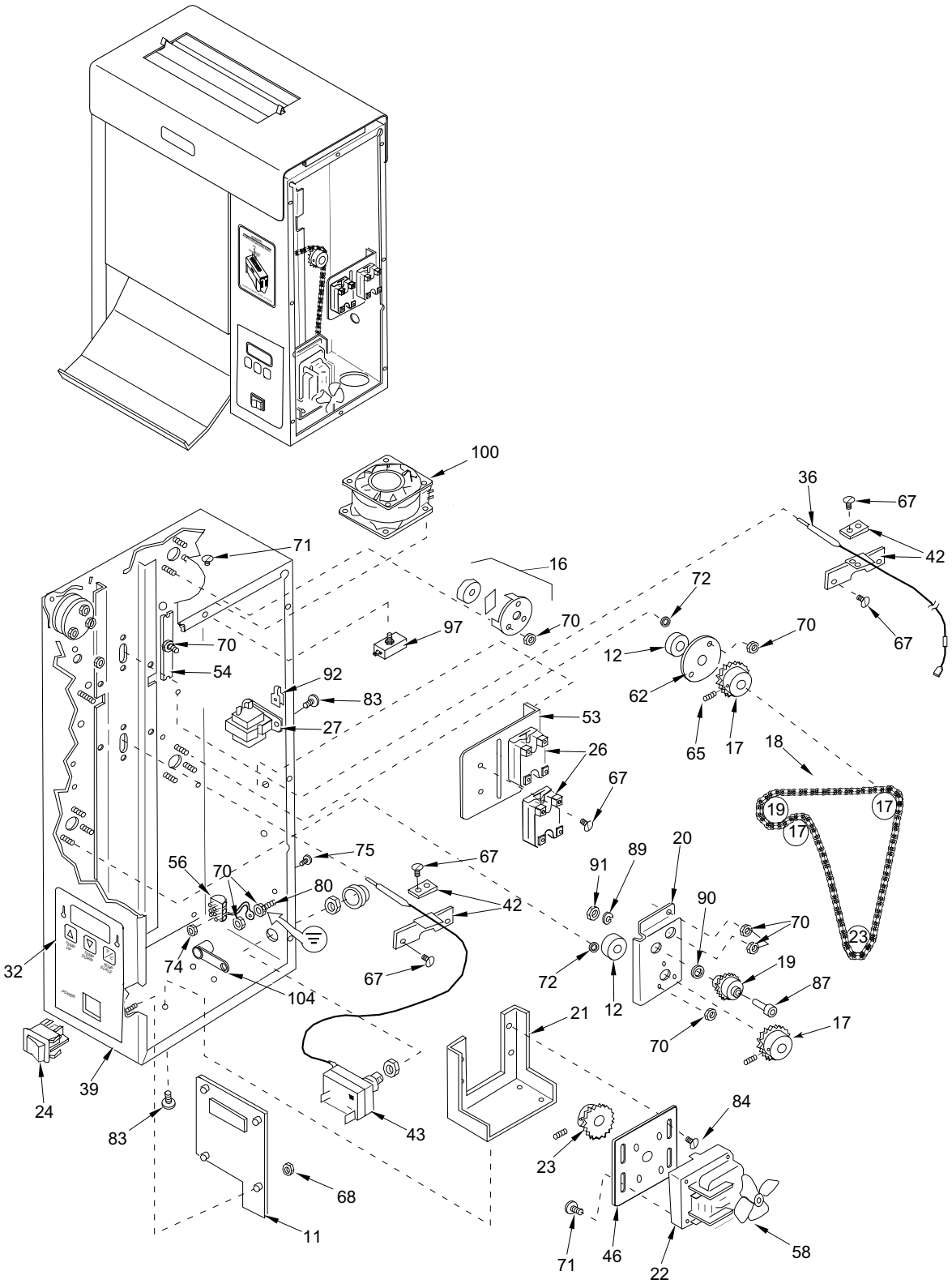
100
36
67
42
71
16
72
70
97
70
12
70
67
54
92
83
62
27
53
26
65
17
18
67
19
17
17
75
67
89
20
56
70
80
91
42
90
70
23
32
74
104
67
72
12
19
87
21
17
70
39
24
83
43
84
23
68
11
71
46
22
58

BUN TOASTER PARTS: HIGH SPEED ROUNDUP TOASTER MODEL VCT-20

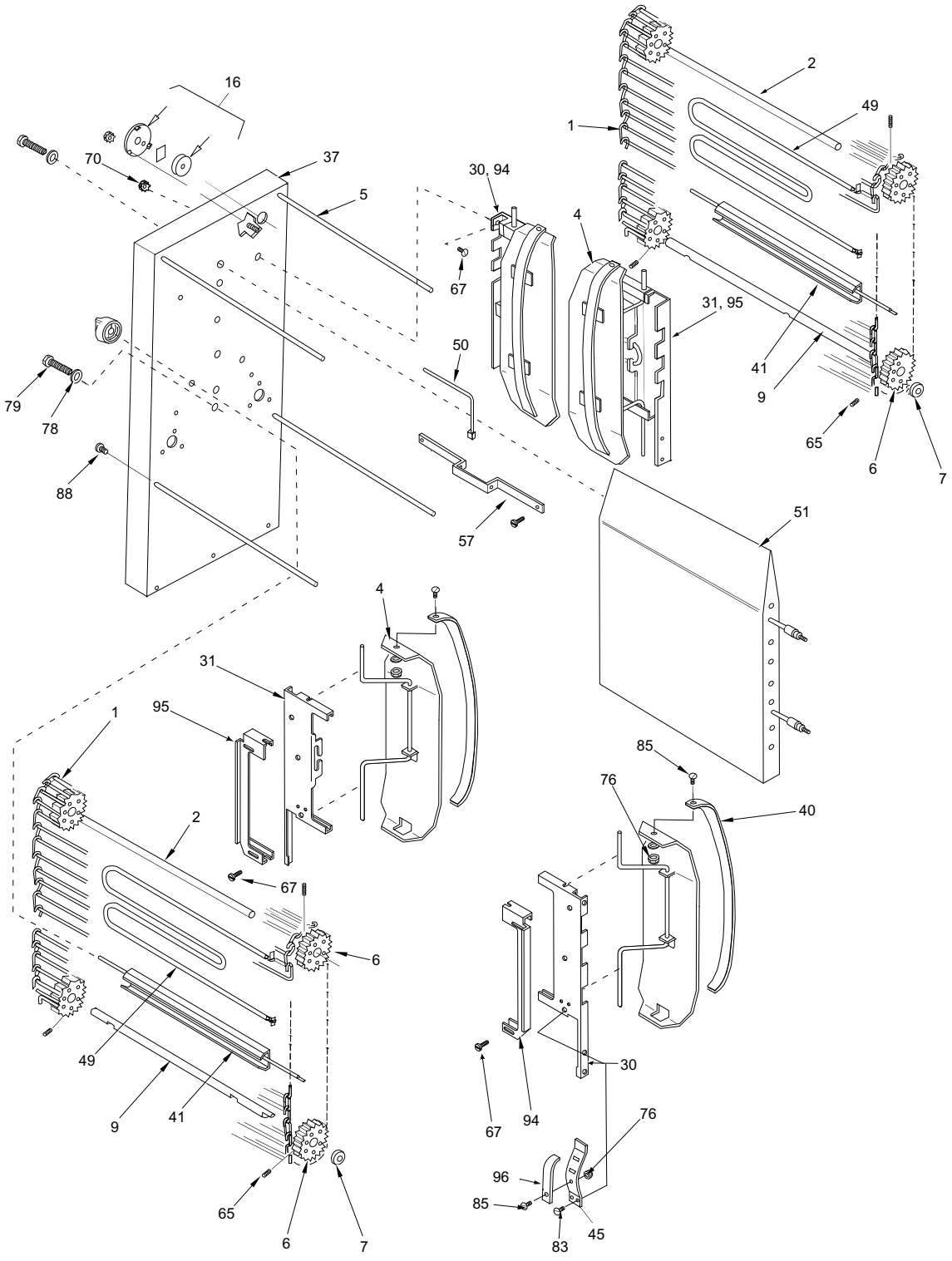

9401 Black Teflon Sheet for Round-Up VCT-20.
Hoja de teflón negro para VCT-20 redondeado.

L x W
33'' x 12.25''

9402 Black Teflon Sheets for Round-Up VCT-20; 3-Pack.
Hojas de teflón negro para VCT-20 redondeado.

L x W
33'' x 12.25''

9403 Black Teflon Sheets for Round-Up VCT-20; 6-Pack.
Hojas de teflón negro para VCT-20 redondeado.

L x W
33'' x 12.25''

9404 Black Teflon Sheets for Round-Up VCT-20; 10-Pack.
Hojas de teflón negro para VCT-20 redondeado.

L x W
33'' x 12.25''

9411 Belt Wrap for Round-Up VCT-20; Pair.
Correa envolvente para VCT-20 redondeado.

Extra Savings; Save over 15%

Teflon Sheet Automatic Ship Program. BPS will automatically ship teflon sheets to you once every month, every 2nd month, or every 3rd month (your choice). You choose which teflon sheets you want to receive and when you want to receive them and **save over 15%!**

BUN TOASTER PARTS: BLACK TEFLON SHEETS AND BELT WRAPS FOR HIGH SPEED TOASTERS

9452 Black Teflon Sheet for Prince Castle TX-208BK.
Hoja de teflón negro para Prince Castle TX-208BK.

L x W
34.25'' x 12.75''

9453 Black Teflon Sheets for Prince Castle TX-208BK 3-Pack.
Hojas de teflón negro para Prince Castle TX-208BK.

L x W
34.25'' x 12.75''

9454 Black Teflon Sheets for Prince Castle TX-208BK 6-Pack.
Hojas de teflón negro para Prince Castle TX-208BK.

L x W
34.25'' x 12.75''

9455 Black Teflon Sheets for Prince Castle TX-208BK 10-Pack.
Hojas de teflón negro para Prince Castle TX-208BK.

L x W
34.25'' x 12.75''

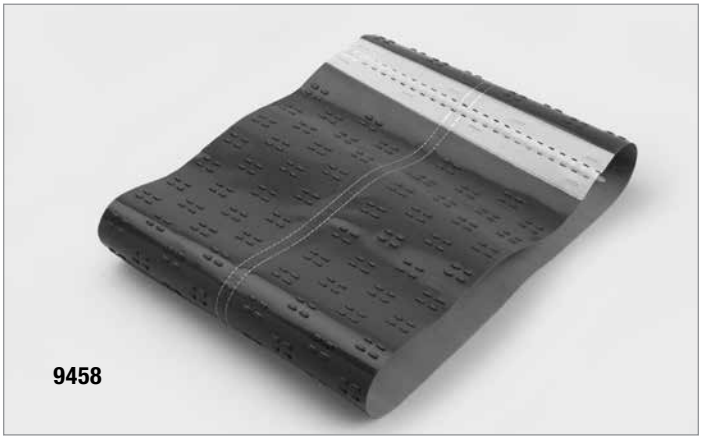

9458 Belt Wrap for Prince Castle TX-208BK.
Correa envolvente para Prince Castle TX-208BK.

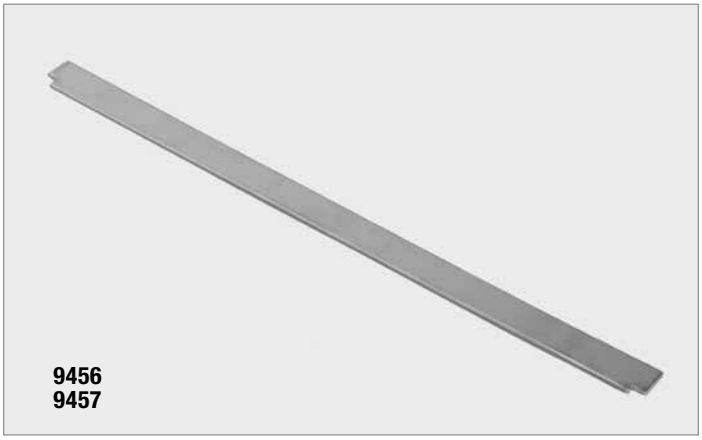

9456 Upper Retainer Clip for Prince Castle TX-208BK.
Clip de retención superior para Prince Castle TX-208BK.

9457 Lower Retainer Clip for Prince Castle TX-208BK.
Clip de retención inferior para Prince Castle TX-208BK.

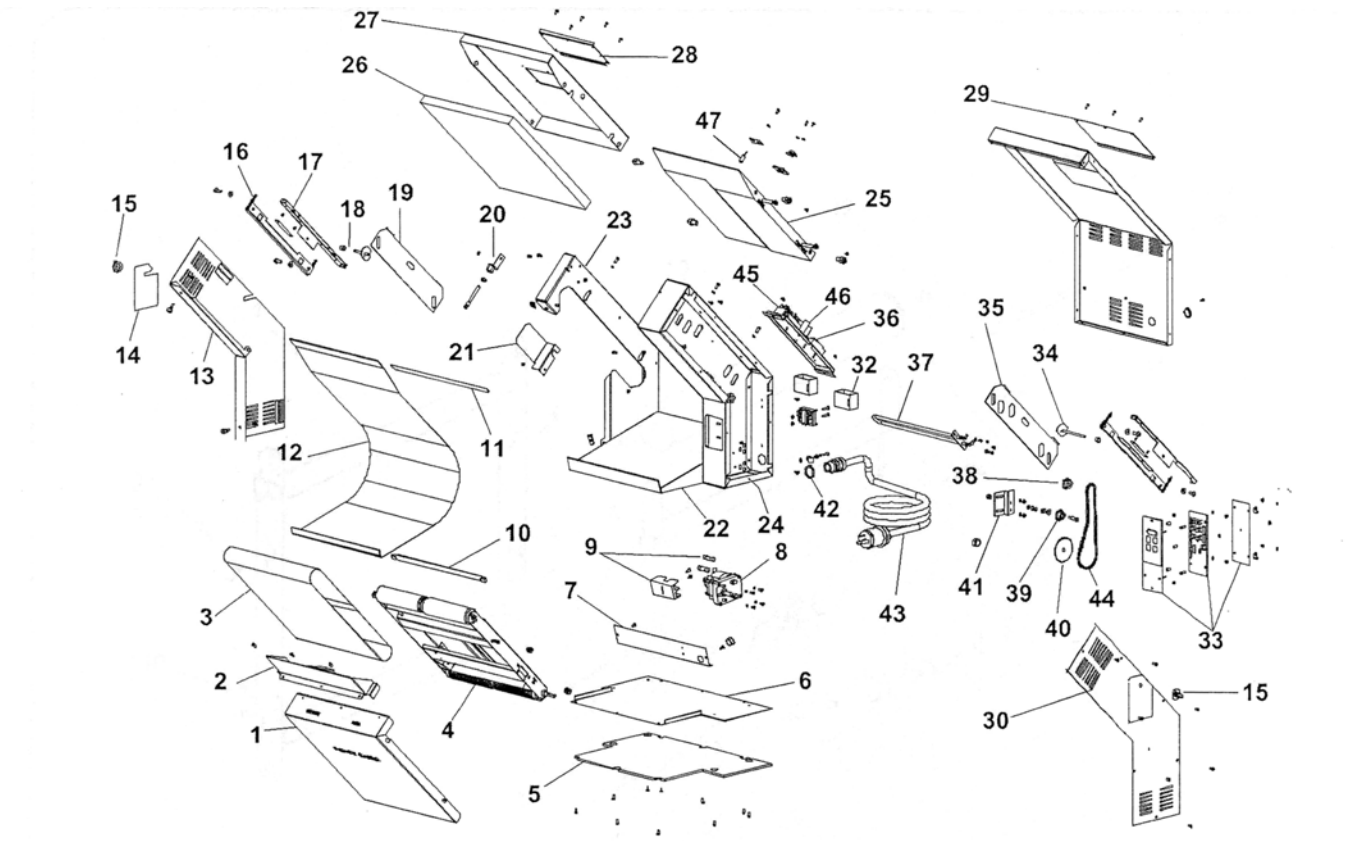

Ref.	Part No.	Description
1	537-634	Front Cover Assy.
2	537-618	Bun Chute
3	537-725S	Rubber Belt
4	537-330S	Rubber Belt
5	537-338	Base Pad
6	537-320	Bottom Plate
7	537-661	Ramp Baffle
8	87-028TXCS	Motor Kit*
9	88-577 88-578	Fuse Block Fuse
10	537-378S	Retainer Bar, Lower
11	537-378S	Retainer Bar, Upper
12	537-403-3S	Teflon Sheet (Pkg. 3)
13	537-333	LH Cover
14	537-604	Bun Crush Overlay
15	70-050	Bun Crush Adj. Knob
16	537-298	Cam Bracket
17	537-649	Guide Bracket
18	537-329	LH Cam Shaft
19	537-300	LH Slide Plate
20	537-381	Conveyor Bracket
21	537-382	Conveyor Bracket
22	537-658	Ramp
23	537-336	LH Upright
24	537-335	RH Upright

Ref.	Part No.	Description
25	537-295S	Platen
26	537-337	Insulation
27	537-296	Heater Housing
28	537-366	Heater Housing Plate
29	537-409	Rear Panel
30	537-332	RH Cover
31	537-396	Bun Thickness Overlat
32	537-665	Hi-Temperature Switch
33	537-663S	PC Board & Overlay Assy.
34	537-328	RH Cam Shaft
35	537-637	RH Slide Plate
36	65-058S	Heater Relay
37	537-341S	Heater
38	86-355S	Sprocket (12 Tooth)
39	537-735S	Idler Sprocket & Bracket Assy.
40	537-348S	Drive Sprocket (32 Tooth)
41	537-735S	Idler Sprocket & Bracket Assy.
42	66-034	Strain Relief
43	72-361S	Power Cord
44	537-729S	Sprockets & Chain Assy.
45	65-048S	Power Relay
46	537-388S	Transformer Assy.
47	537-400	Temperature Probe

BUN TOASTER PARTS: HIGH SPEED PRINCE CASTLE TOASTER MODEL TX-208BK

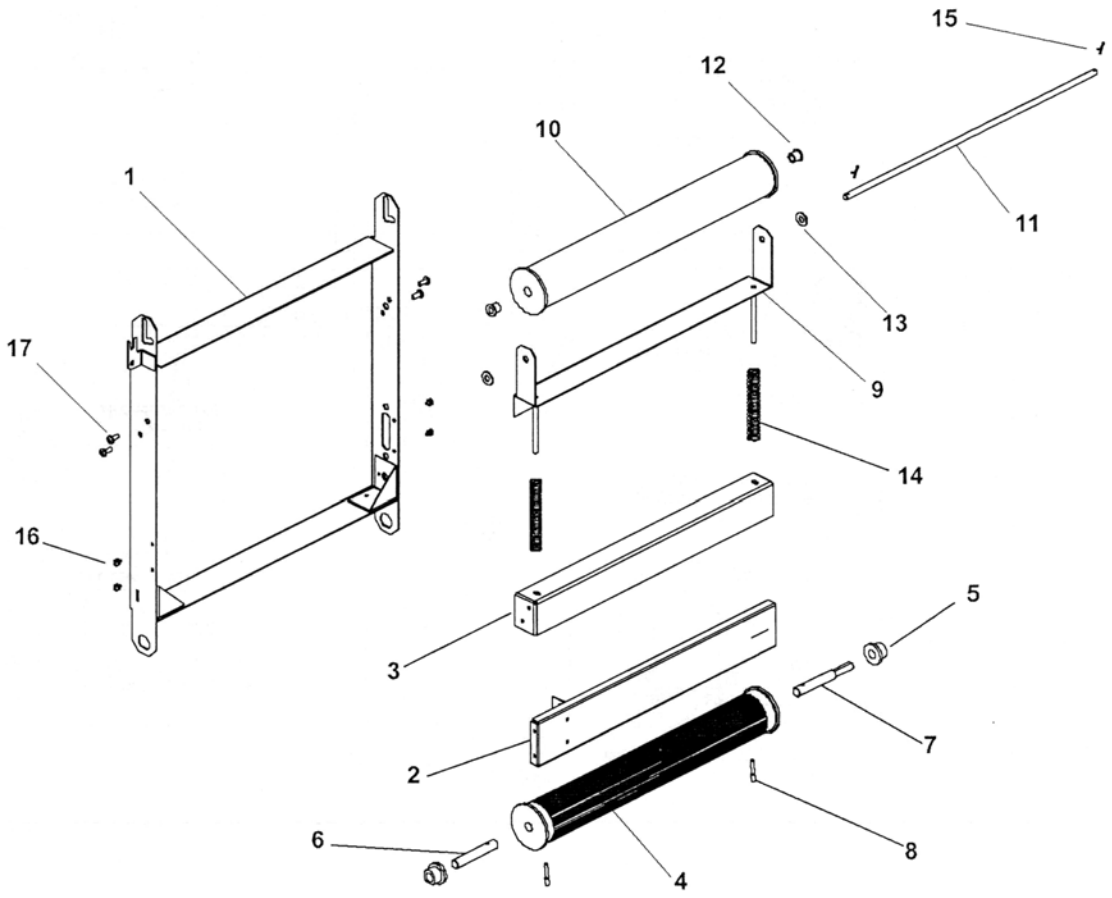

Ref.	Part No.	Description
1	537-351	Frame
2	537-354	Air Shield
3	537-349	Cross Brace
4	537-412	Lower Roller
5	537-370S	Lower Bearing (Package of 2)
6	537-318S	Lower Shaft (Short)
7	537-316S	Lower Shaft (Long)
8	197-279	Pin
9	537-334	Slide Bracket
10	537-411	Upper Roller
11	537-315	Upper Shaft
12	537-317S	Upper Bearing (Package of 2)
13	79-055S	Washer (Package of 2)
14	81-017S	Spring (Package of 2)
15	86-272S	Cotter Pin (Package of 2)
16	69-011S	Rivet (Package of 4)
17	76-640	Screw

Credit Cards Accepted!

8404

8404 Sprocket, 4-Pack.
OEM #: 197-255
Catarina, paquete de 4.

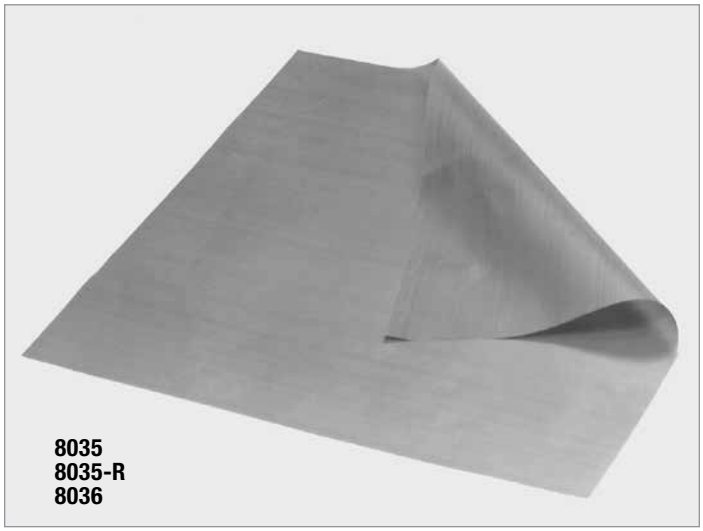

8035
8035-R
8036

8035 Brown Teflon **Sheet** for Prince Castle (16 1/2" x 22 1/2").
Hoja de teflón café para Prince Castle Prince Castle (16 1/2" x 22 1/2").

L x W
22.5'' x 16.5''

8035-R Brown Teflon **Sheets** for Prince Castle (16 1/2" x 22 1/2"); 2-Pack

L x W
22.5'' x 16.5''

8036 Brown Teflon **Sheet** for Prince Castle (16 1/2" x 22 1/2").
Hoja de teflón café para Prince Castle Prince Castle (16 1/2" x 22 1/2").

L x W
22.5'' x 16.5''

8034

8034 Brown Teflon 20 Ft. **Roll** x 16 1/2" for Prince Castle.
Teflón café rollo de 20 pies x 16 1/2" para Prince Castle.

L x W
20ft x 16.5''

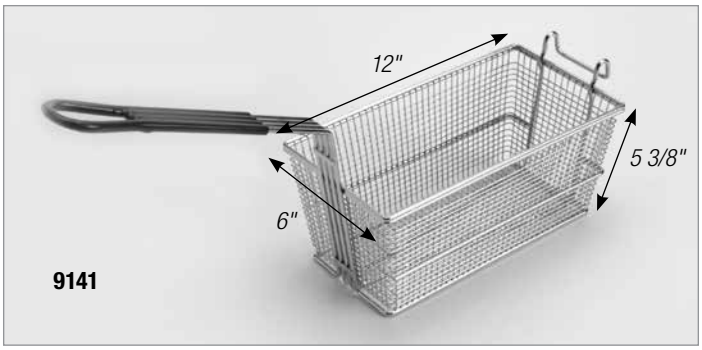

9141 Fry Basket.
Cesta para freir.

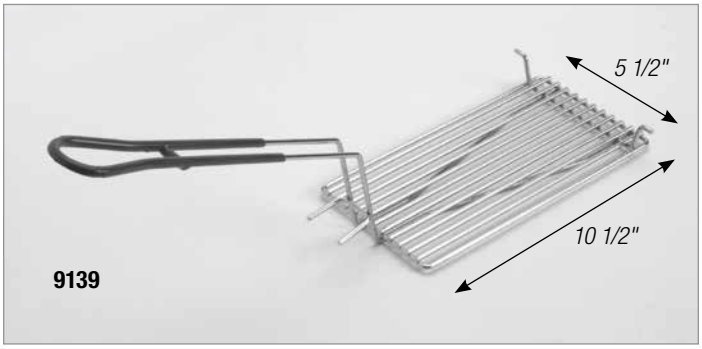

9139 Fry Basket Submerger.
Cesta para freir sumergible.

L x W x H
10.5'' x 5.5'' x 8''

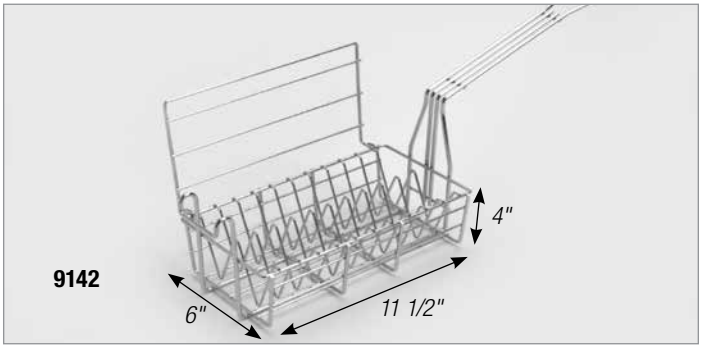

9142 Fry Basket, 10 Piece Fish & Chicken.
Cesta para freir, 10 piezas de pescado y pollo.

L x W x H
11.5'' x 6" x 4"

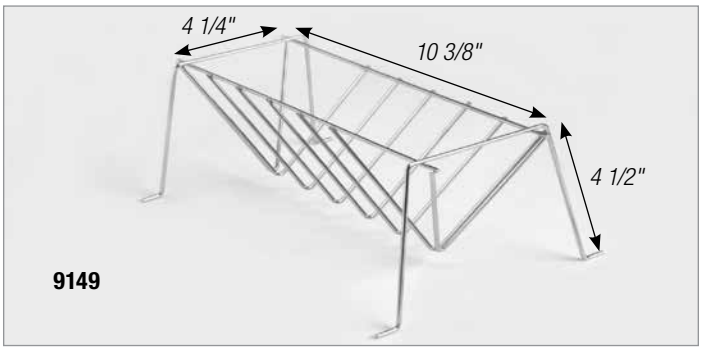

9149 5-Slot Insert for Fry Basket.
Inserto de 5 piezas para cesta para freir.

9148 Basket Support Rack.
Rejilla de soporte de cesta.

L x W
13.75" x 12.375"

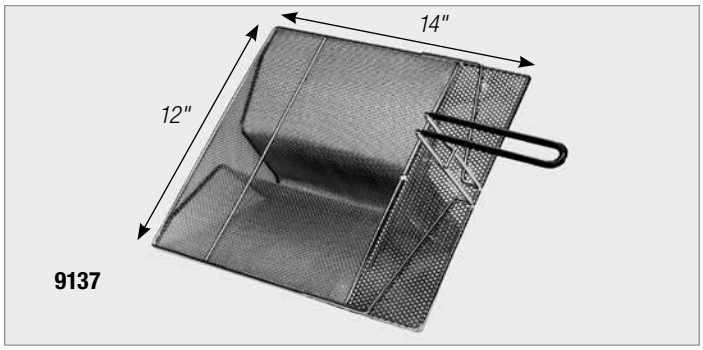

9137 Fryer Sediment Tray for Frymaster Models MJ45E, MJH50 and GF40.

Bandeja de sedimentos de freidora para Frymaster modelos MJ45E, MJH50 y GF40.

L x W x H
12'' x 14'' x 13''

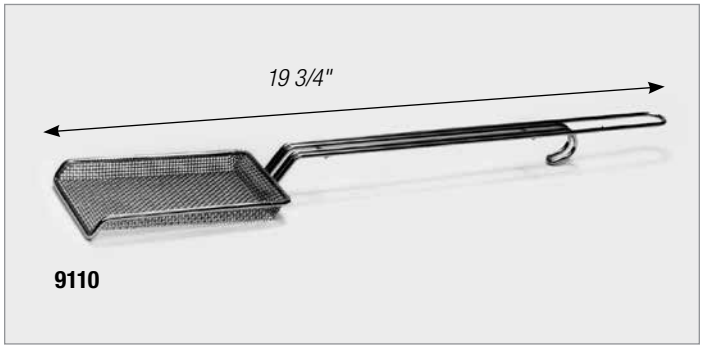

9110 Fryer Skimmer.

Espumadera para freidora.

L x W
19.75" x 4"

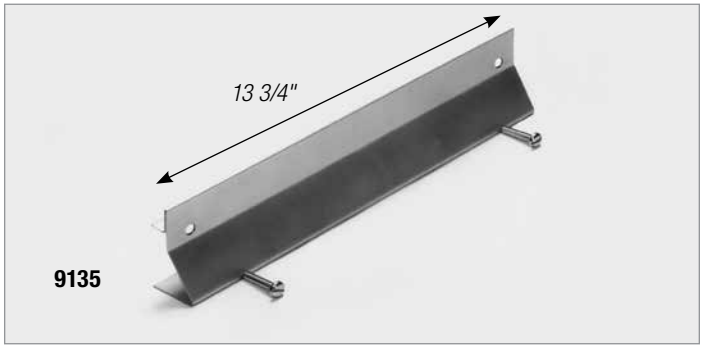

9135 Stainless Steel Universal Fry Basket Hanger with Fasteners.

Colgador para cesta para freir universal de acero inoxidable con sujetadores.

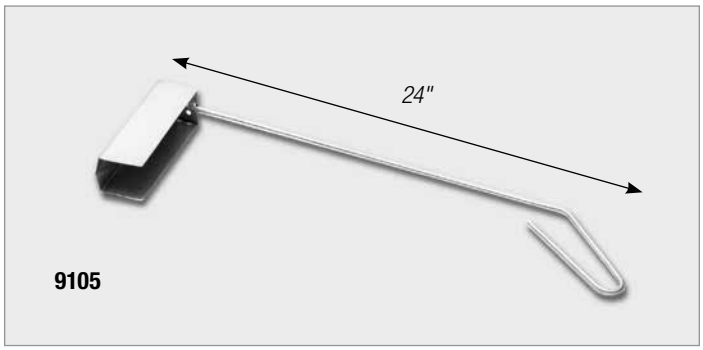

9105 Stainless Steel Fryer Clean Out Scoop.

Cuchara limpiadora para freidora, de acero inoxidable.

Length
24''

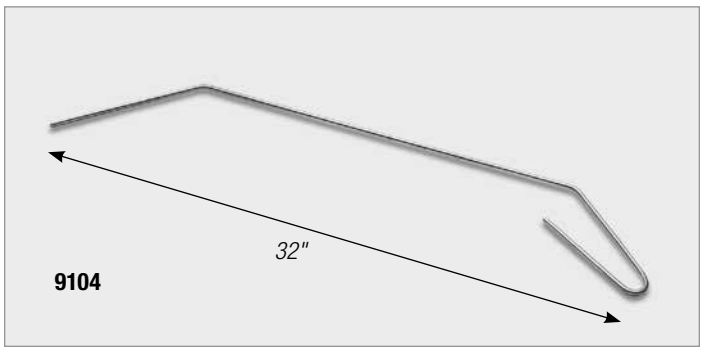

9104 Stainless Steel Fryer Drain Clean Out Rod.

Varilla de limpieza para drenaje de freidora, acero inoxidable.

Length
32''

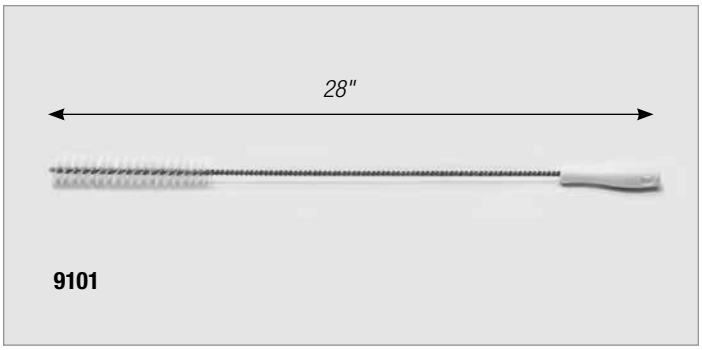

9101 Fryer Brush, Straight.
Cepillo para freidora, recto.
For cool cleaning.

Length
28”

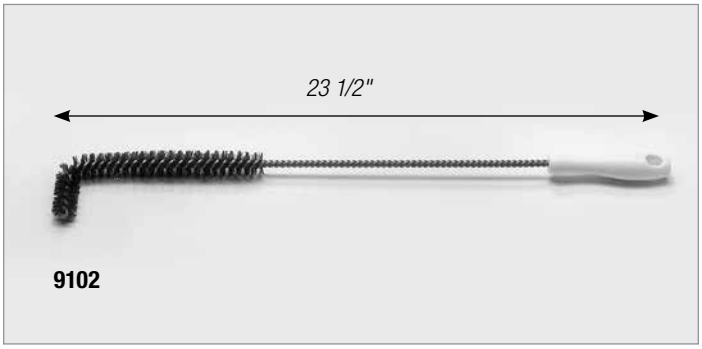

9102 Fryer Brush, Right Angle.
Cepillo para freidora, ángulo recto.

Length
23 1/2”

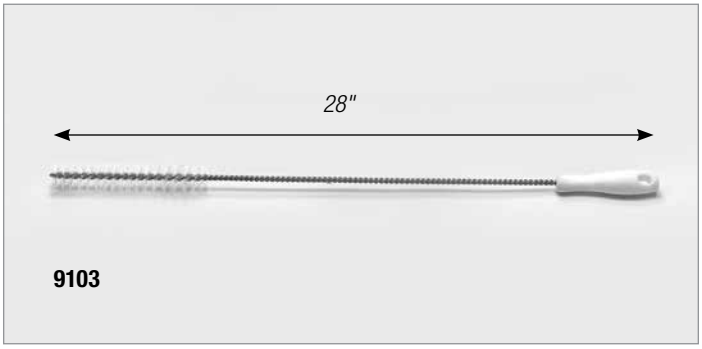

9103 Straight Fryer Brush, Teflon Brush.
Cepillo para freidora recto, cepillo de teflón.
For hot cleaning.

Length
28”

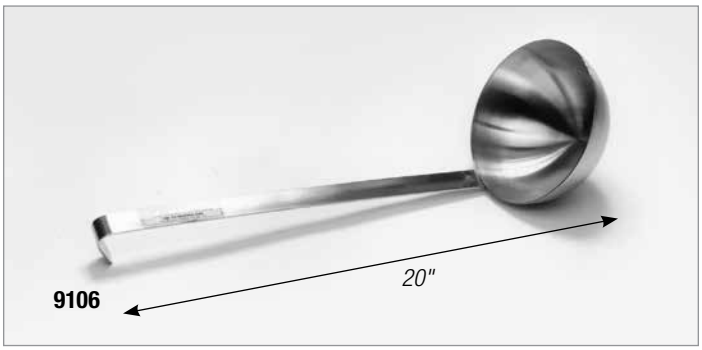

9106 Stainless Steel Heavy-Duty 32oz Ladle.
Cucharón de 32 onzas de uso rudo, acero inoxidable.

Length
20.25”

9109 Heavy-Duty Shortening and Ice Scoop.
Cucharón para grasa vegetal y helado, de uso rudo.

Length
14”

9111

9111 Stainless Steel Shortening Container with Casters.

Recipiente para grasa vegetal, de acero inoxidable con ruedecillas.

Cover included.

L x W x H
15" x 16" x 15"

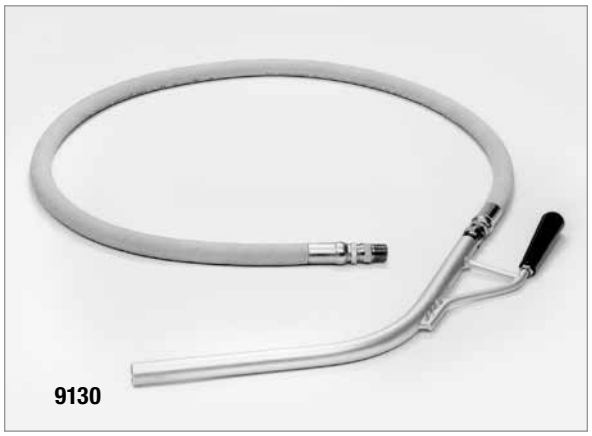
9130

9130 Complete Hose Assembly with Nozzle and Handle (7 feet overall length).

Conjunto de manguera completo con boquilla y mango (longitud total 7 pies).

Used with FAST Filter.

Length
7Ft.

9131

9131 Fryer Filtering Hose with 1/2" Swivel Fittings.

Manguera filtrante para freidora con conexiones giratorias.

Used with FAST Filter.

9132

9132 Hose Nozzle with Handle.

OEM #: 214-10189

Boquilla de manguera con mango.

Used with FAST Filter.

9128

9128 Tank.
OEM #: 209-50019
Used with FAST Filter.

9130-1

9130-1 1/2" Female Quick Disconnect for Fryer Hose.
OEM #: 209-10013
Dispositivo de desconexión rápida hembra para manguera de freidora.
Used with FAST Filter.

9130-2

9130-2 1/2" Male Quick Disconnect for Fryer Hose.
OEM #: 150-15202
Dispositivo de desconexión rápida macho para manguera de freidora.
Used with FAST Filter.

9130-3 1/2" Quick Disconnect Complete (not pictured).

9130-4 3/8" Quick Disconnect Complete (not pictured).

9136

9136 Fryer Drain Extension Pipe.
Tubería de extensión para drenaje de freidora.

Length
10''

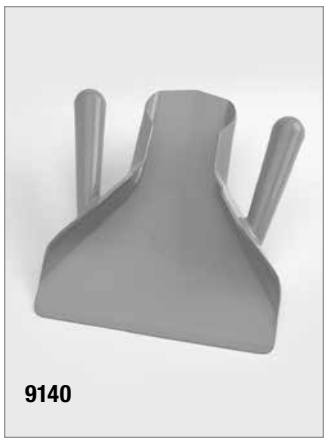

9140

9140 French Fry Scoop.
Cucharón para papas fritas.

9140-1

9140-1 Onion Ring Scoop.

9122

9122 3M Shortening Test Strips (40) w/o Color Chart.
Tiras de prueba para grasa vegetal 3M (40) sin tabla de color

8055-3

8055-3 Insulated Gloves (Pair) 27" Long.
Guantes aislados (par) 27" de largo.

Length
27"

9123

9123 Two Tube Test Kit for Fryer Oil.
Juego de dos tubos de ensaye para aceite de freidora

8145
8145-T
8146
8146-T

8145 Infra-Red Heat Lamp (clear) 120V/375 watt.
Lámpara de calor infrarroja (incolora) 120V/375 watts.

8145-T Infra-Red Heat Lamp (teflon-coated) 120V/375 watt.
Lámpara de calor infrarroja (cubierta de teflón) 120V/375 watts.

8146 Infra-Red Heat Lamp (clear) 120V/375 watt (6-pack).
Lámpara de calor infrarroja (incolora) 120V/375 watts (paquete de 6).

8146-T Infra-Red Heat Lamp (teflon-coated) 120V/375 watt (6-pack).
Lámpara de calor infrarroja (cubierta de teflón) 120V/375 watts (paquete de 6).

8145-S

8145-S Socket for 8145.
Sócket para 8145.

8147
8148

8147 Shatter Resistant Teflon Coated Bulb. 120V/60 Watt.
Bombilla recubierta de teflón inastillable. 120V/60 Watts.

L x W
10" x 3"

8148 Shatter Resistant Teflon Coated Bulbs. 120V/60 Watt (6-pack).
Bombillas recubiertas de teflón inastillable. 120V/60 Watts (paquete de 6).

9000

9000 1 Gallon Fryer Boilout.
Producto para limpieza de Freidora,1 galón.

9003

D1313E4 FAST Filter Envelopes 13'' x 13.125''.
Sobres para filtros FAST 13'' x 13.125''.
Other sizes available.

L x W
13'' x 13.125''

9120

9120 BurnGuard Safety Equipment Station. Washable and Durable. 6 Hooks.

Estación para equipo de seguridad BurnGuard. Lavable y durable. Ayuda a prevenir robos.

Wall fasteners included.

L x W
24'' x 6''

SAVE 50% on Safety Equipment Station (Part No. **9120**) when you order it with the Fryer Safety Maintenance Kit (Part No. **8050-1**). Pay only **$19.95** for Safety Equipment Station (normally $39.95) when you order it with the Fryer Safety Maintenance Kit (Part No. **8050-1**).

8110

8110 Full-Length, Heavy-Duty Latex Apron.

Delantal de látex de uso rudo de longitud completa.

8055-1

8055-1 Insulated Gloves (Pair) 18” Long.

Guantes aislados (par) 18” de largo.

Water-Proof, Secure Grip

Length
18''

8111
8111-1

8111 Adjustable Face Shield, with Visor.
Careta ajustable.

8111-1 Replacement Visor Only for Face Shield.
Visor de repuesto para careta.

8109

8109 10” Hi-top Boots. Size large.
Botas altas de 10”.
Extra large available.

OR SAVE 10% by buying a Fryer Safety Maintenance Kit.

8050-1 $99.95
Kit consists of the following:

8055-1 Insulated Gloves (Pair)
8109 10" Hi-top Boots
8110 Apron
8111 Face Shield with Visor

9116

9116 BurnGuard 42” Apron with Steam-Protecting Vapor Guard.

Delantal de 42” BurnGuard con protección contra vapor Vapor Guard.

Poly-cotton washable.

Length
42”

9117

9117 BurnGuard 18” Shin Guard.

Espinillera de 18” BurnGuard.

Length
18”

9114

9114 BurnGuard 18" 3-Finger Kevlar Gloves; Washable Lining.

Guantes de kevlar de 3 dedos BurnGuard; revestimiento lavable.

900 Degrees Scorch-Proof

Length
18”

9115

9115 BurnGuard Washable Replacement Liners for 3-Finger Gloves.

Repuestos de revestimientos lavables BurnGuard para guantes de 3 dedos.

9113

9113 BurnGuard 18” 5-Finger Gloves with Removable washable liners.

Guantes de 5 dedos BurnGuard, de 18” con revestimiento lavable y desprendible.

Length
18”

9112

9112 BurnGuard 15” Oven Mitt (Puppet-style) with Steam-Protecting Vapor Guard.

Mitones para horno, de 15” BurnGuard con protección contra vapor Vapor Guard.

Length
15”

9315-0
9315-1
9315-2
9315-3

9315-0 Red Large Angle Broom 12” Fiberglass with Handle.

9315-0 **Rojo** escoba de ángulo grande de 12”, de fibra de vidrio con mango.

9315-1 Blue Large Angle Broom 12” Fiberglass with Handle.

9315-1 **Azul** escoba de ángulo grande de 12”, de fibra de vidrio con mango.

9315-2 Green Large Angle Broom 12” Fiberglass with Handle.

9315-2 **Verde** escoba de ángulo grande de 12”, de fibra de vidrio con mango.

9315-3 Yellow Large Angle Broom 12” Fiberglass with Handle.

9315-3 **Amarillo** escoba de ángulo grande de 12”, de fibra de vidrio con mango.

9306

9306 Lobby Dust Pan.

Recogedor.

9318

9318 18” Floor Sweep <u>with</u> wood handle.

Barredora para pisos, de 18” <u>con</u> mango de madera.

9330
9331
9332
9333

9330 Red Fiberglass Break-a-way Mop Stick.
Bastón para trapeador separable de fibra de vidrio **rojo**.

9331 Blue Fiberglass Break-a-way Mop Stick.
Bastón para trapeador separable de fibra de vidrio **azul**.

9332 Green Fiberglass Break-a-way Mop Stick.
Bastón para trapeador separable de fibra de vidrio **verde**.

9333 Yellow Fiberglass Break-a-way Mop Stick.
Bastón para trapeador separable de fibra de vidrio **amarillo**.

9340
9340-0
9340-1
9340-2
9340-3

9340 24# Cotton Mop Head.
Cabeza de trapeador de algodón #24.

9340-0 24# Cotton Mop Head. **Red**.
Cabeza de trapeador de algodón #24. **Rojo**.

9340-1 24# Cotton Mop Head. **Blue**.
Cabeza de trapeador de algodón #24. **Azul**.

9340-2 24# Cotton Mop Head. **Green**
Cabeza de trapeador de algodón #24. **Verde**.

9340-3 24# Cotton Mop Head. **Yellow**
Cabeza de trapeador de algodón #24. **Amarillo**.

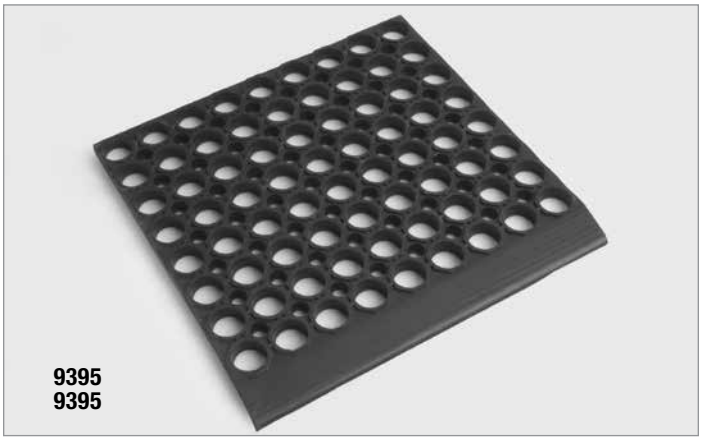

9395
9395

9394 3'x5' #562 Sanitop Refrigerator/Freezer Floor Mat, Black.
Alfombrilla para refrigerador/congelador Sanitop de 3'x5' #562, negra.

L x W
5ft x 3ft

9395 3'x10' #562 Sanitop Refrigerator/Freezer Floor Mat, Black.
Alfombrilla para refrigerador/congelador Sanitop de 3'x10' #562, negra.

L x W
10ft x 3ft

NEED IMMEDIATE DELIVERY?

Let BPS know and we will ship your order **Next Day Air Priority.**

9320-0
9320-1
9320-3

9320-0 Red 35 Quart Mop Bucket/Combo Pack.
Juego de balde de 36 galones y trapeador **rojo**.

9320-1 Blue 35 Quart Mop Bucket/Combo Pack.
Juego de balde de 36 galones y trapeador **azul**.

9320-3 Yellow 35 Quart Mop Bucket/Combo Pack.
Juego de balde de 36 galones y trapeador **amarillo**.

9301

9301 Wet Floor Sign, English and Spanish.
Letrero de “Piso húmedo”, inglés y español.

9311-1
9311-2
9311-3
9311-4

9311-1 Blue Broom with Handle.

9311-2 Yellow Broom with Handle.

9311-3 Blue Broom without Handle.

9311-4 Yellow Broom without Handle.

9312-1
9312-3
9310-1
9310-3

9312-1 Blue Dual Surface Deck Brush with Handle.

9312-3 Yellow Dual Surface Deck Brush with Handle.

9310-1 Blue Dual Surface Deck Brush withoutHandle.

9310-3 Yellow Dual Surface Deck Brush without Handle.

9360 2'x3' #117 Heritage Rib Dining Room Floor Mat (specify color).

Alfombrilla para comedor Heritage de 2'x3' #117 (especifique color).

L x W
3ft x 2ft

9361 3'x4' #117 Heritage Rib Dining Room Floor Mat (specify color).

Alfombrilla para comedor Heritage de 3'x4' #117 (especifique color).

L x W
4ft x 3ft

9350 3'x5' #117 Heritage Rib Dining Room Floor Mat (specify color).

Alfombrilla para comedor Heritage de 3'x5' #117 (especifique color).

L x W
5ft x 3ft

9355 4'x6' #117 Heritage Rib Dining Room Floor Mat (specify color).

Alfombrilla para comedor Heritage de 4'x6' #117 (especifique color).

L x W
6ft x 4ft

9356 4'x8' #117 Heritage Rib Dining Room Floor Mat (specify color).

Alfombrilla para comedor Heritage de 4'x8' #117 (especifique color).

L x W
8ft x 4ft

9362 3'x6' #117 Heritage Rib Dining Room Floor Mat (specify color).

Alfombrilla para comedor Heritage de 3'x6' #117 (especifique color).

L x W
6ft x 3ft

9363 3'x10' #117 Heritage Rib Dining Room Floor Mat (specify color).

Alfombrilla para comedor Heritage de 3'x10' #117 (especifique color).

L x W
10ft x 3ft

COLORS AVAILABLE: Hunter Green, Charcoal, Brown, Red/Black, Gray

6045 3-Box Glove Dispenser. Includes tabs and screws for easy wall mounting.

Despachador de guantes de 3 cajas. Incluye pestañas y tornillo para montarse fácilmente en la pared.

Holds 1 to 3 Boxes of Gloves.

H x W x D
16" x 9.25" x 3.5"

8110

8110 Full-Length, Heavy-Duty Latex Apron.

Delantal de látex de uso rudo de longitud completa.

Length
34.75''

8111

8111 Adjustable Face Shield.

Careta ajustable.

8111-1 Replacement Visor Only for Face Shield.

Visor de reuesto para careta.

8109

8109 10" Hi-top Boots.

Botas altas de 10".

Height
10''

8055-1

8055-1 Insulated Gloves (Pair) 18" Long.

Guantes aislados (par) 18" de largo.

Length
18''

8055-5

8055-5 17" Long Oven Mitt. Fire Retardant for use on ovens.

Mitón para horno de 17" de largo, retardante de flama para usar en hornos.

8055-2

8055-2 One Cut-Resistant Glove.

Un guante resiste a los cortes.

Length
10''

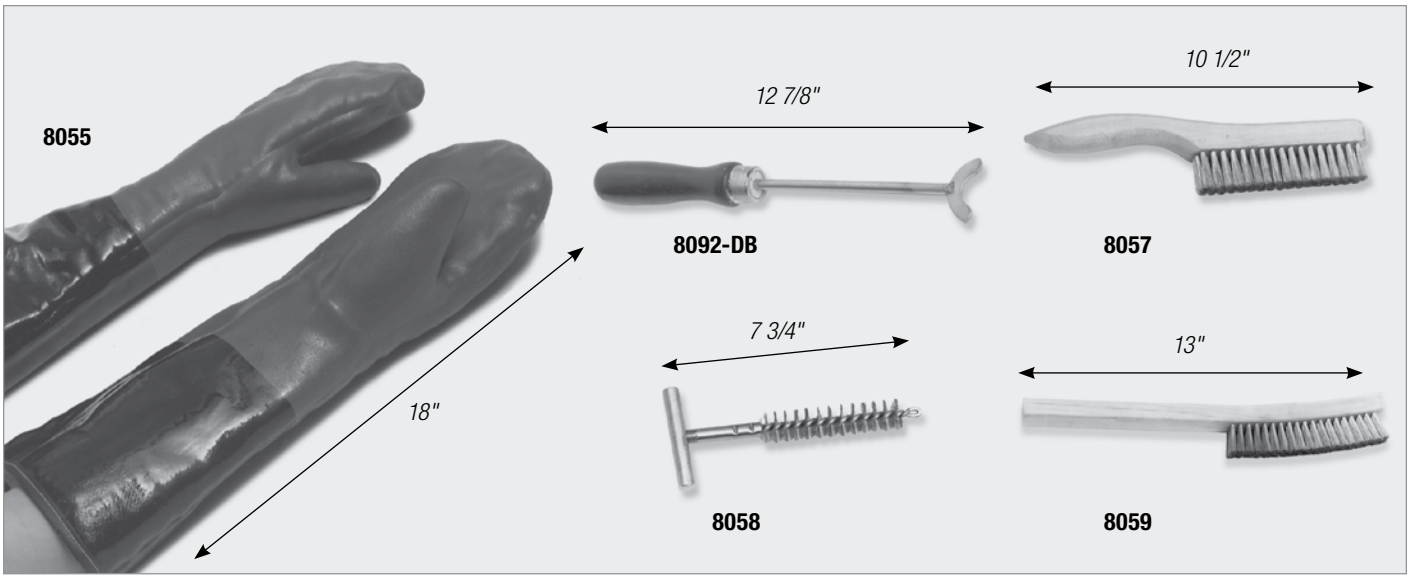

8055 Insulated Broiler Mitts (Pair) 18" Long.

Mitones aislados para parrilla (par) 18" de largo.

Water-proof, Secure grip.

Length
18''

8092 Shaft Cleaning Tool with Handle.

Herramienta de limpieza de flecha con agarradera.

Length
12.875''

8058 Brush (Hard Brass) for Cleaning Burner Tube.

Cepillo (latón duro) para limpiar tubo de quemador.

Length
7.5''

8057 Brush (Soft Brass) for Cleaning Burner Screen.

Cepillo (latón suave) para limpiar pantalla de quemador.

Length
10.5''

8059 Brush (Stainless Steel) for Cleaning Protective Shield and Rod Belt.

Cepillo (acero inoxidable) para limpiar protección y banda.

Length
13''

OR SAVE 20% By Buying a Maintenance Helper Kit. **8050** $84.95

Kit consists of the following: **8055** Insulated Broiler Mitts (Pair); **8057** Screen Brush; **8058** Tube Brush; **8059** Stainless Steel Brush; **8092-DB** Shaft Cleaning Tool

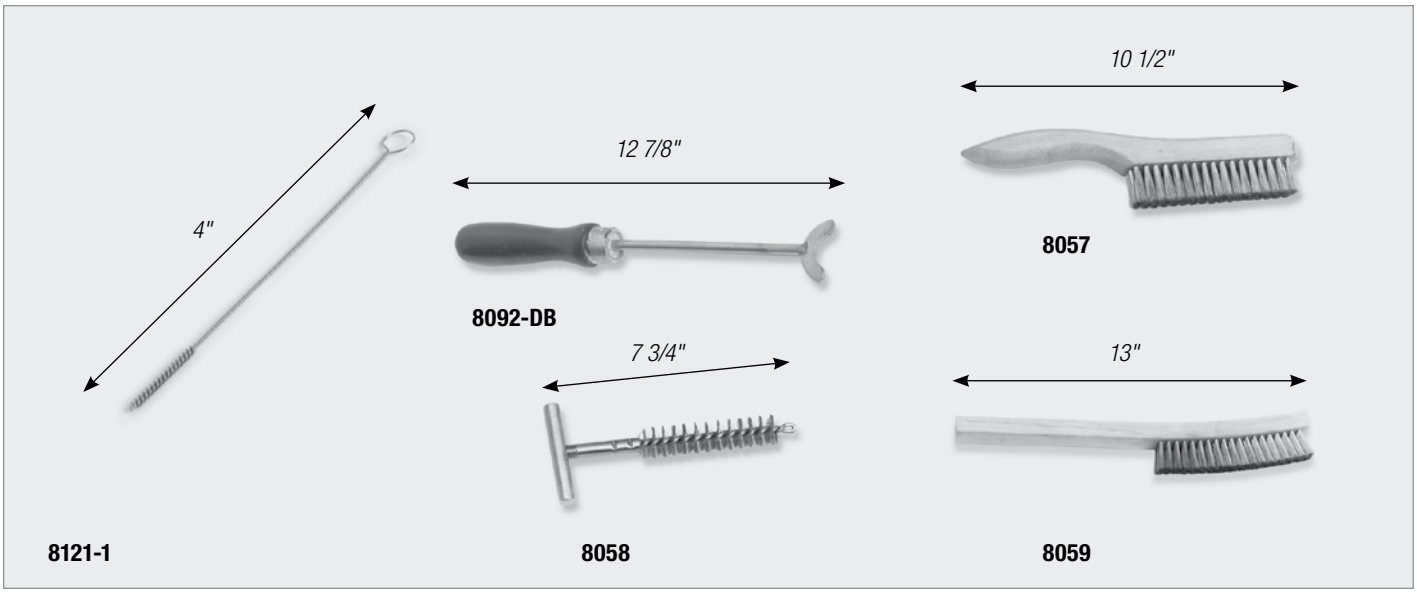

8050-5 Broiler Cleanup Kit, Natural Gas.

Juego para limpieza de parrilla, gas natural.

Contains all above-pictured parts.

8050-6 Broiler Cleanup Kit, Propane Gas.

Juego para limpieza de parrilla, gas propano.

Contains all above-pictured parts.

Credit Cards Accepted!

8147 Shatter Resistant Teflon Coated Bulb. 120V/60 Watt.
Bombilla recubierta de teflón inastillable. 120V/60 Watts.

L x W
10" x 3"

8148 Shatter Resistant Teflon Coated Bulbs. 120V/60 Watt (6-pack).
Bombillas recubiertas de teflón inastillable. 120V/60 Watts (paquete de 6).

8175 Atkins Thermometer with Needle Probe.
Sonda de aguja de termometro Atkins.

8177 Needle Probe Only for Atkins Thermometer.

8176 Atkins Surface Thermometer.
Termómetro de superficie Atkins.

8178 Surface Probe Only for Atkins Surface Thermometer.

8179 Thermometer. The DualTemp 480 Infrared and Probe Thermometer Measures both surface and internal temperatures.
De termometro.

Uses **Infrared** to measure surface temperatures from -27˚ to 428˚ Fahrenheit.

Uses **Probe** to measure internal temperatures from -68˚ to 628˚ Fahrenheit.

9146 6" Black Plastic Tongs.
Tenazas de plástico negras de 6".

Length
6"

9143 Pan, 2-Handle Amber for Duke and Prince Castle Holding Units.

Bandeja con 2 asas ámbar para unidades de contención Duke y Prince Castle.

L x W
20.5'' x 6.875''

9143-6 Pan, 2-Handle Amber for Duke and Prince Castle Holding Units; 6-Pack.

9143-10 Pan, 2-Handle Amber for Duke and Prince Castle Holding Units; 10-Pack.

9147 Drain Insert (plastic, amber) for Duke and Prince Castle Pans. Metal insert available.

Inserto de drenaje (plástico, ámbar), para bandejas Duke y Prince Castle.

L x W x H
10" x 3" x 1''

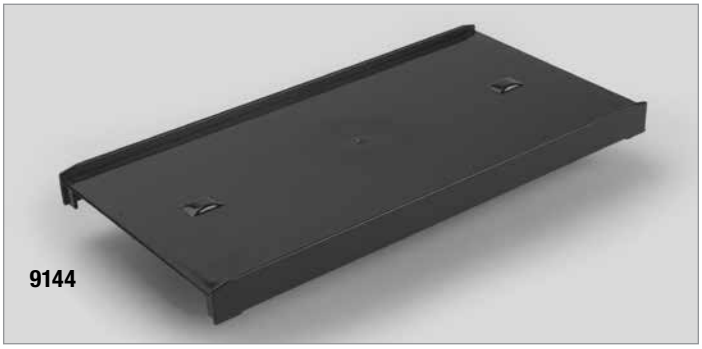

9144 Pan Lid - Solid, Black for Duke Pan Only.

Tapa de bandeja - maciza, negra, sólo para bandeja Duke.

L x W x H
14.5'' x 7.25'' x 1''

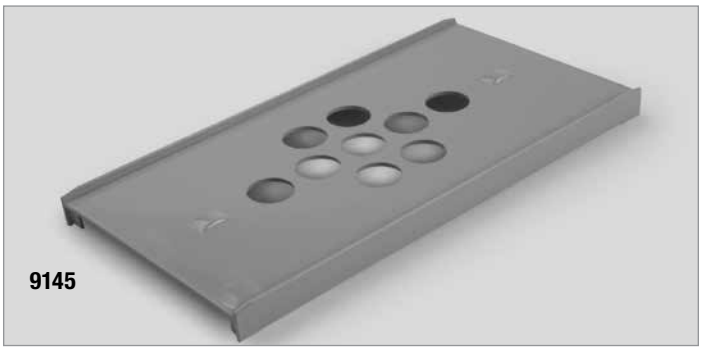

9145 Pan Lid - Vented, Gray for Duke Pan Only

Tapa de bandeja - hueca, gris, sólo para bandeja Duke.

L x W x H
27'' x 7.25'' x 1''

9150 Pan Lid For Prince Castle Only.

Tapa de bandeja, sólo para Prince Castle.

L x W x H
25.25" x 7'' x .75"

UPS DELIVERY SCHEDULE (IN DAYS), & FREE ITEMS FOR YOU

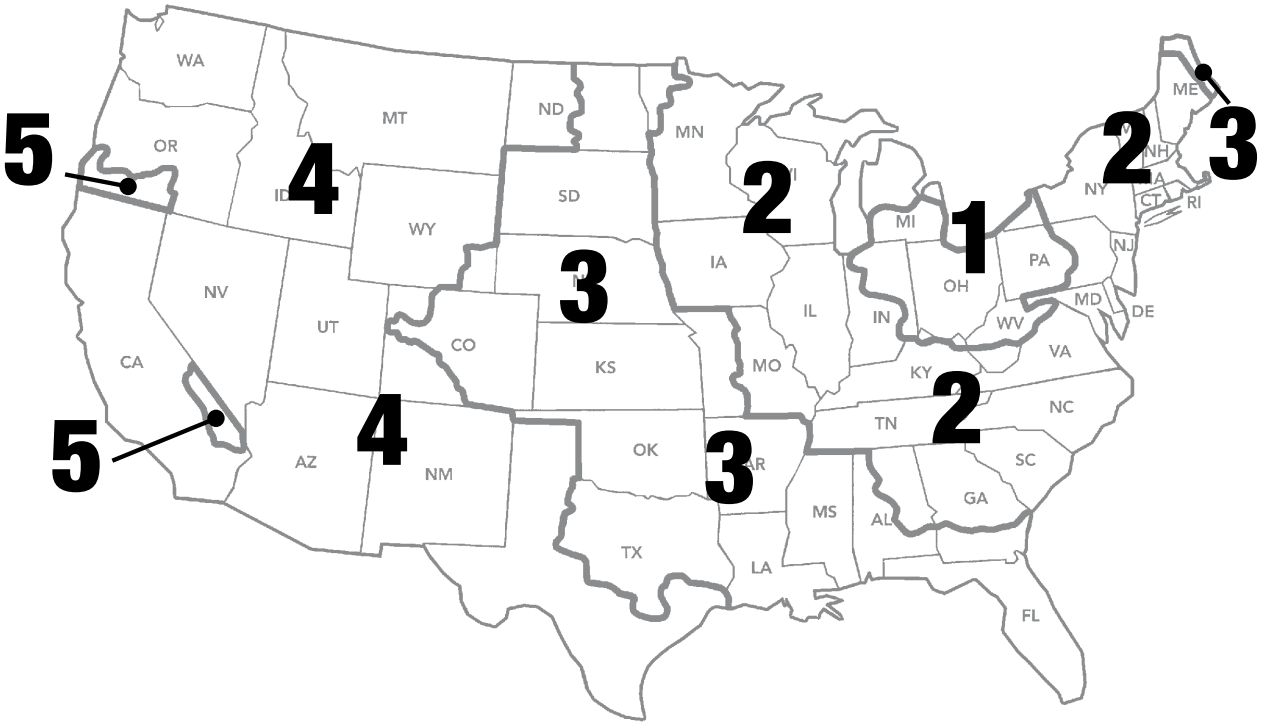

CALL US 24 HOURS A DAY!

You can place your order or leave a message with our after-hours message center staff. Your order will be confirmed by phone and shipped the very next business day.

NEED NEXT DAY DELIVERY?

Any order received by 3:00pm Eastern Standard Time can be shipped Next Day Air. You will receive your order by 10:30am the next day.

FREE ITEMS FOR YOU! JUST CALL OR EMAIL AND WE'LL GET THEM TO YOU IMMEDIATELY!

8500

8500 BPS Buyer's Guide.
Guía del comprador BPS.

8501

8501 Laminated Card.
Tarjeta laminada.

8503

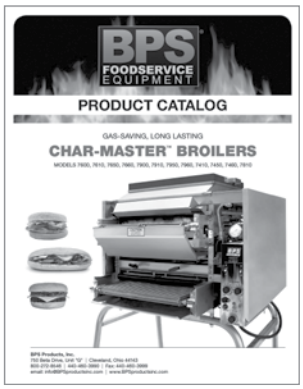

8503 Broiler Catalog.

8504

8504 Broiler Repair Guide.
Guía de reparación de parrilla.

BPS PRODUCTS, INC.
750 Beta Drive, Unit "G"
Cleveland, Ohio 44143
800-272-8546
440-460-3990
Fax: 440-460-3999
Email: info@bpsproductsinc.com

PRSRT STD
US POSTAGE
PAID
WILLOUGHBY OH
PERMIT NO 284

FACTORY-DIRECT PRICES

SAME-DAY SHIPPING

TECHNICAL SUPPORT

FRIENDLY SERVICE

Credit cards accepted

VISA MasterCard AMERICAN EXPRESS

TO ORDER: Call Toll-free at 1-800-272-8546; or Fax (440) 460-3999